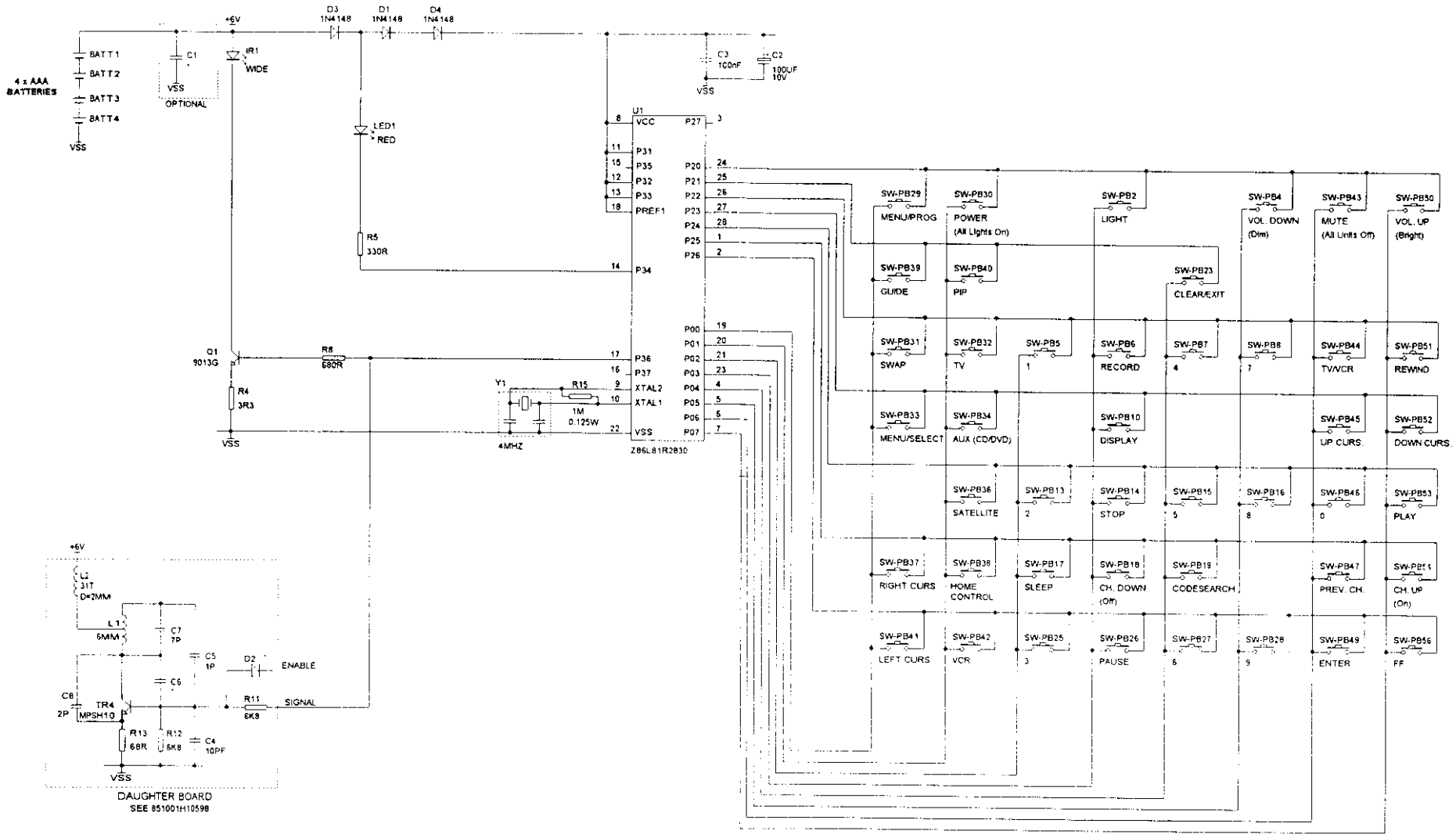

NOTES:-

1. ALL UNSPECIFIED RESISTORS ARE 0.25W
2. ALL UNSPECIFIED CAPACITORS ARE CERAMIC DISC

*** DENOTES COMPONENT NOT INSTALLED

CONFIDENTIAL - FOR REFERENCE ONLY

Repro. PICO WAIF File No. F and	DO NOT SCALE DRAWING	TITLE:	
	DRN BKW DATE 19/12/97	RCA RCSAT 6V RF/IR Remote	
	APPD. DATE	FIRST DRAWN 19/12/97	PRINT DATE 14:03:57 14-Jan-1998 / SHEET No. 1 of 1
	FILE F:\JOSEPH\RCSATRF1.SCH	REVISION DATE 19/12/97	REV. 1
	PICO ELECTRONICS Ltd., Eastfield Industrial Estate, Glenrothes, Fife, KY7 4NZ, SCOTLAND		

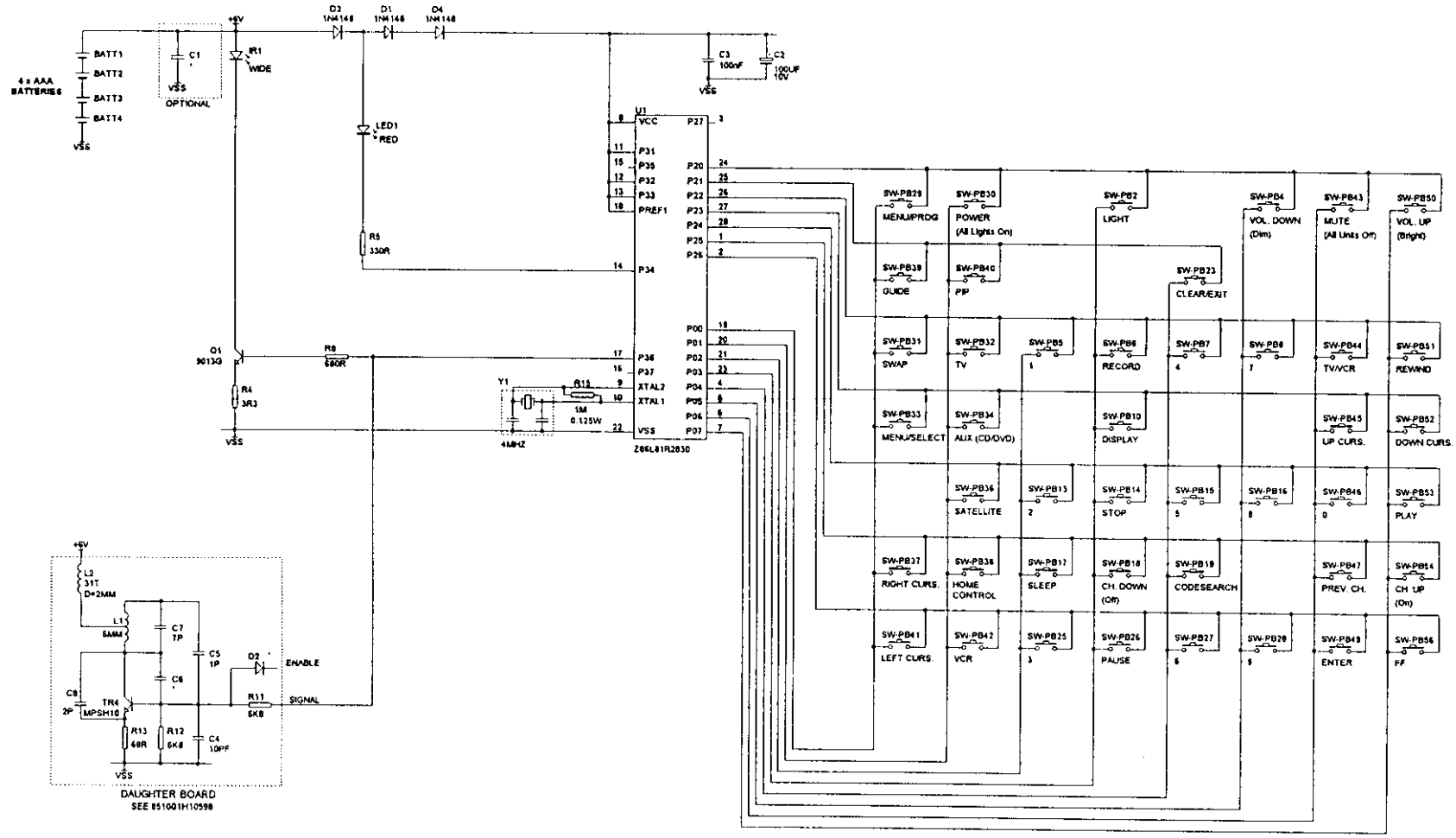

NOTES:-

1. ALL UNSPECIFIED RESISTORS ARE 0.25W
2. ALL UNSPECIFIED CAPACITORS ARE CERAMIC DISC

"*" DENOTES COMPONENT NOT INSTALLED

CONFIDENTIAL - FOR REFERENCE ONLY

DO NOT SCALE DRAWING	TITLE:		
DRN BKW DATE 19/12/97	RCA RCSAT 6V RF/IR Remote		
APPD. DATE	FIRST DRAWN 19/12/97	PRINT DATE 14:03:37 14-Jan-1998	SHEET No. 1 of 1
FILE F:\JOSEPH\RCSATRF1.SCH		REVISION DATE 19/12/97	REV. 1

PICO ELECTRONICS Ltd., Eastfield Industrial Estate, Glenrothes, Fife, KY7 4NZ, SCOTLAND