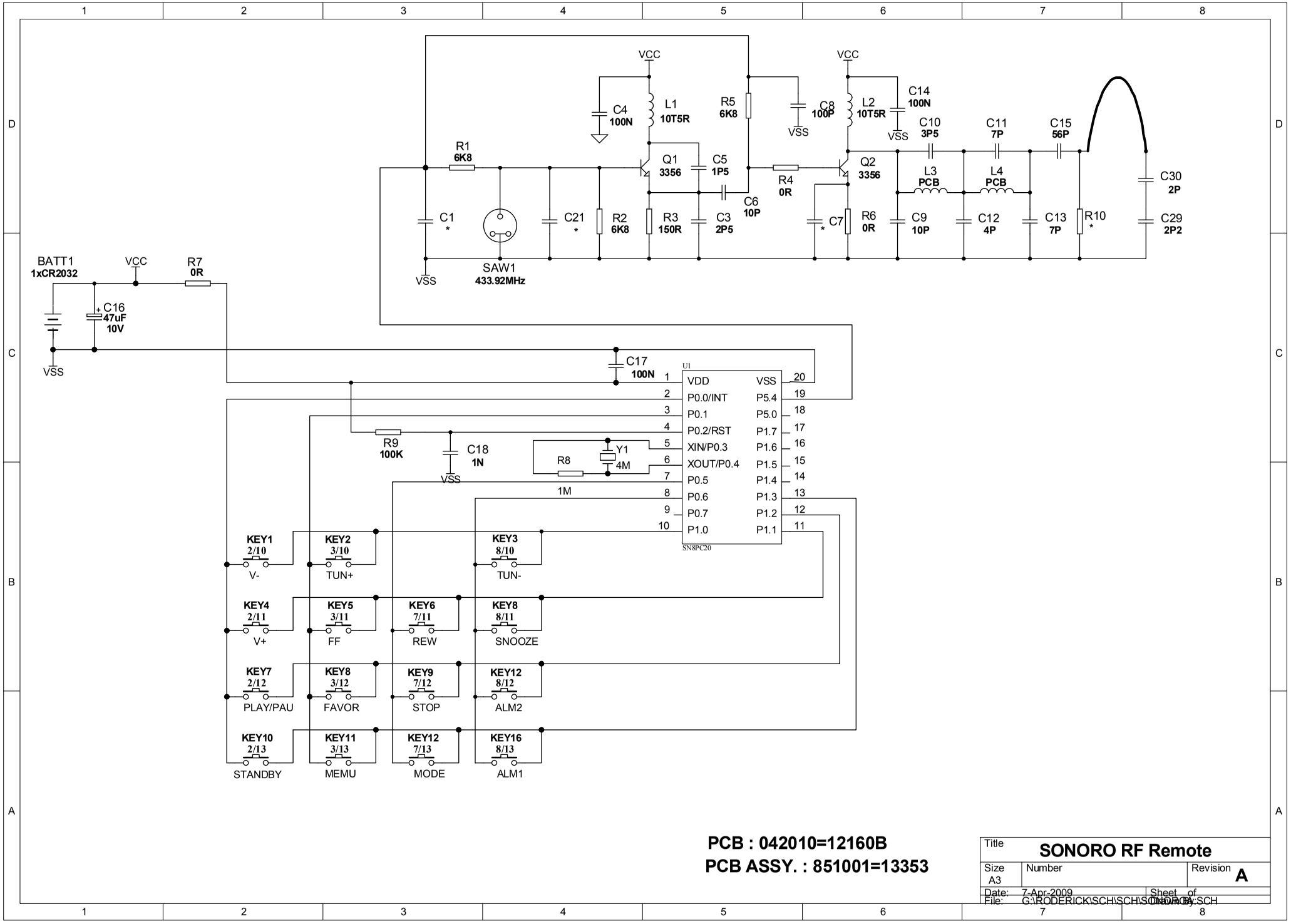

PCB : 042010=12160B

PCB ASSY. : 851001=13353

Title	**SONORO RF Remote**	
Size A3	Number	Revision **A**
Date: 7-Apr-2009	Sheet of	
File: G:\RODERICK\SCH\SCH\SONORO.SCH	Drawn By:	