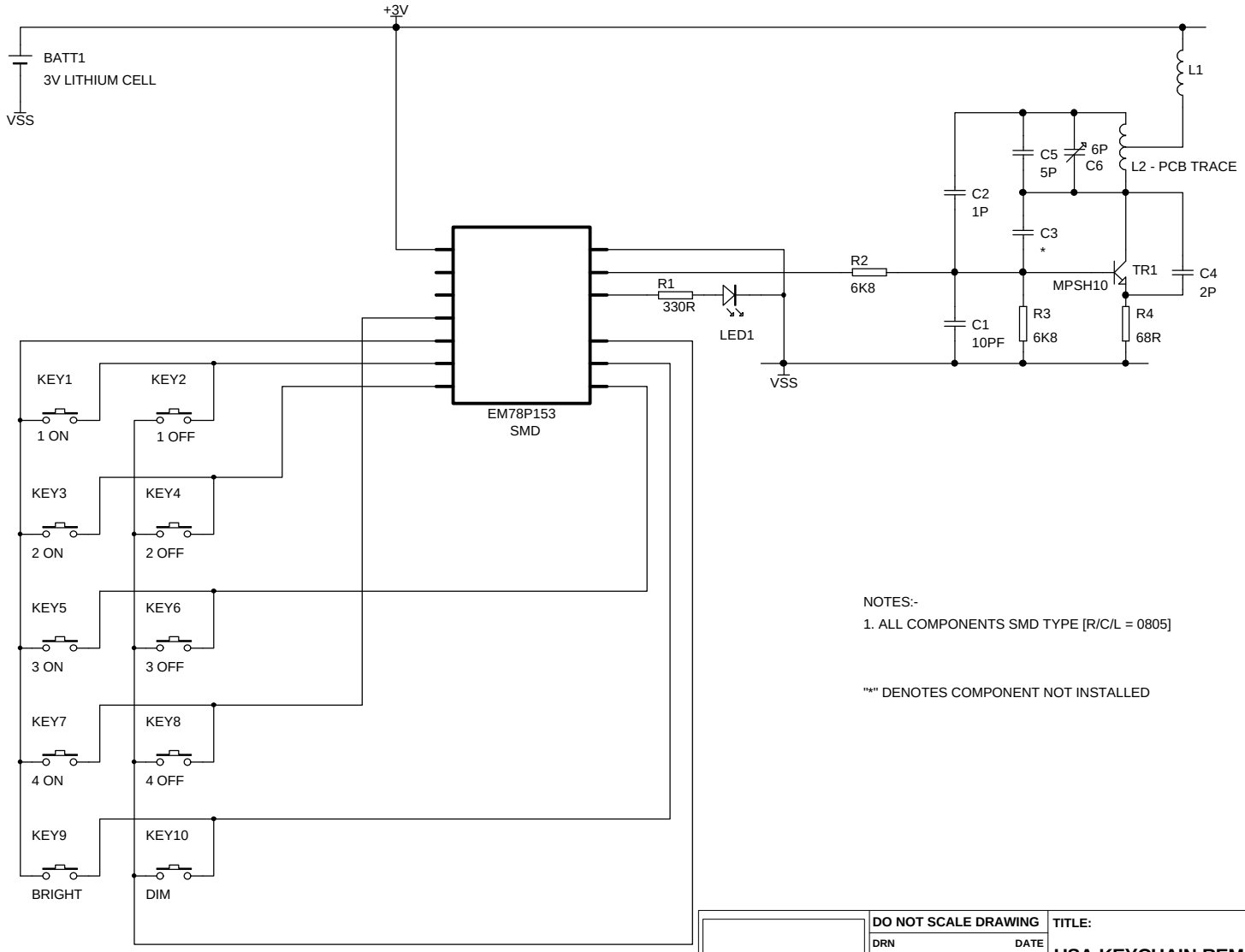

NOTES:-

1. ALL COMPONENTS SMD TYPE [R/C/L = 0805]

"*" DENOTES COMPONENT NOT INSTALLED

Error : PICO.WMF File Not Found	DO NOT SCALE DRAWING	TITLE:	
	DRN HMcL 7/5/99	USA KEYCHAIN REMOTE (KR22A)	
	APPD. DATE	FIRST DRAWN HMcL 7/5/99	PRINT DATE 12:06:01 24-Sep-1999 / SHEET No. 1 of 1
	FILE Z:\ENG\ME\RAYMOND\JOSEPH\KR22\KR22A.SCH	REVISION DATE	REV. A

PICO ELECTRONICS Ltd., Eastfield Industrial Estate, Glenrothes, Fife, KY7 4NZ, SCOTLAND