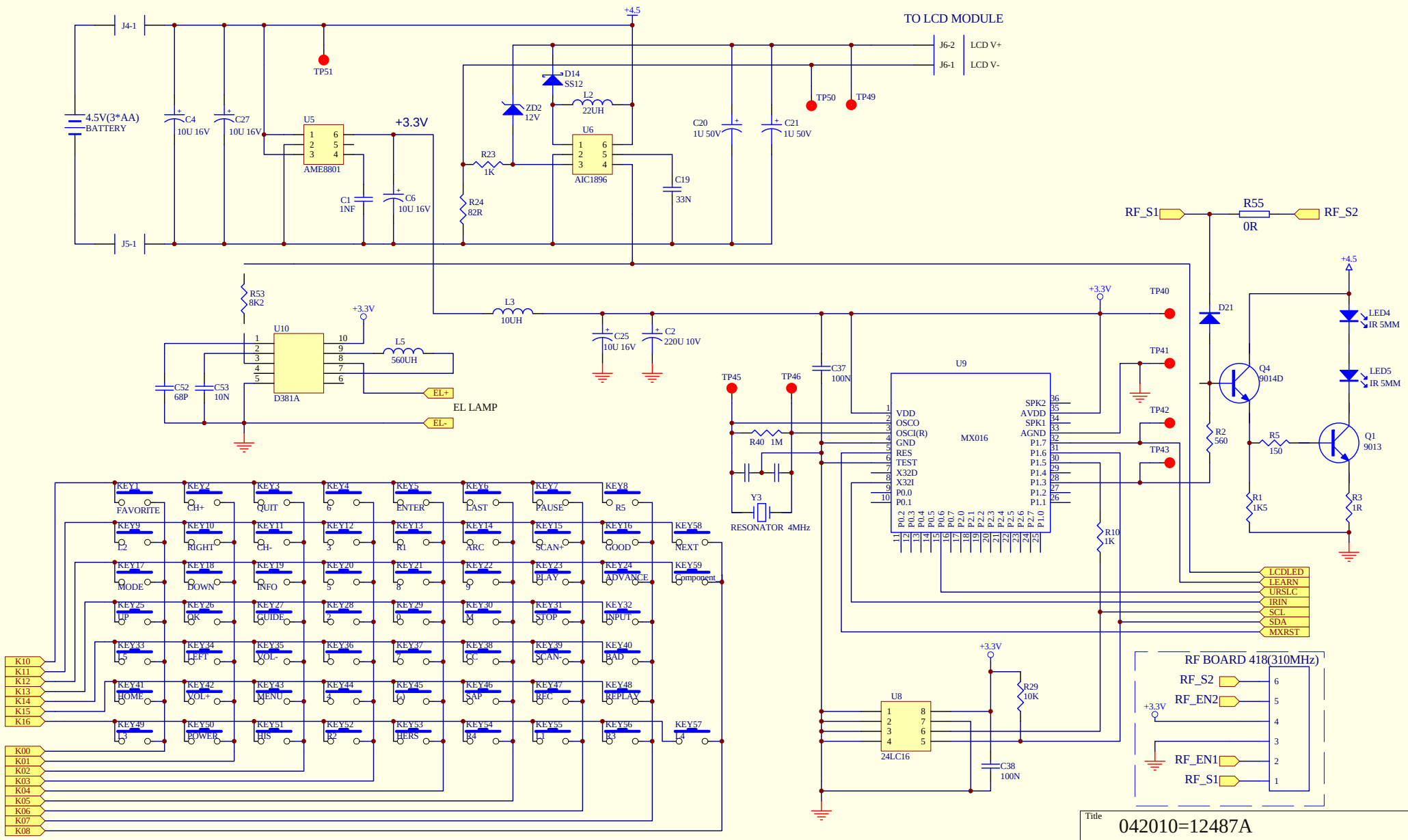


| Title | 042010=12487A | |
|---|---|---|
| Size B | Number | Revision |
| Date: 5-Jul-2010 | | Sheet of |
| File: D:\SCH\SCH\12487A2.SCH | | Drawn By: |