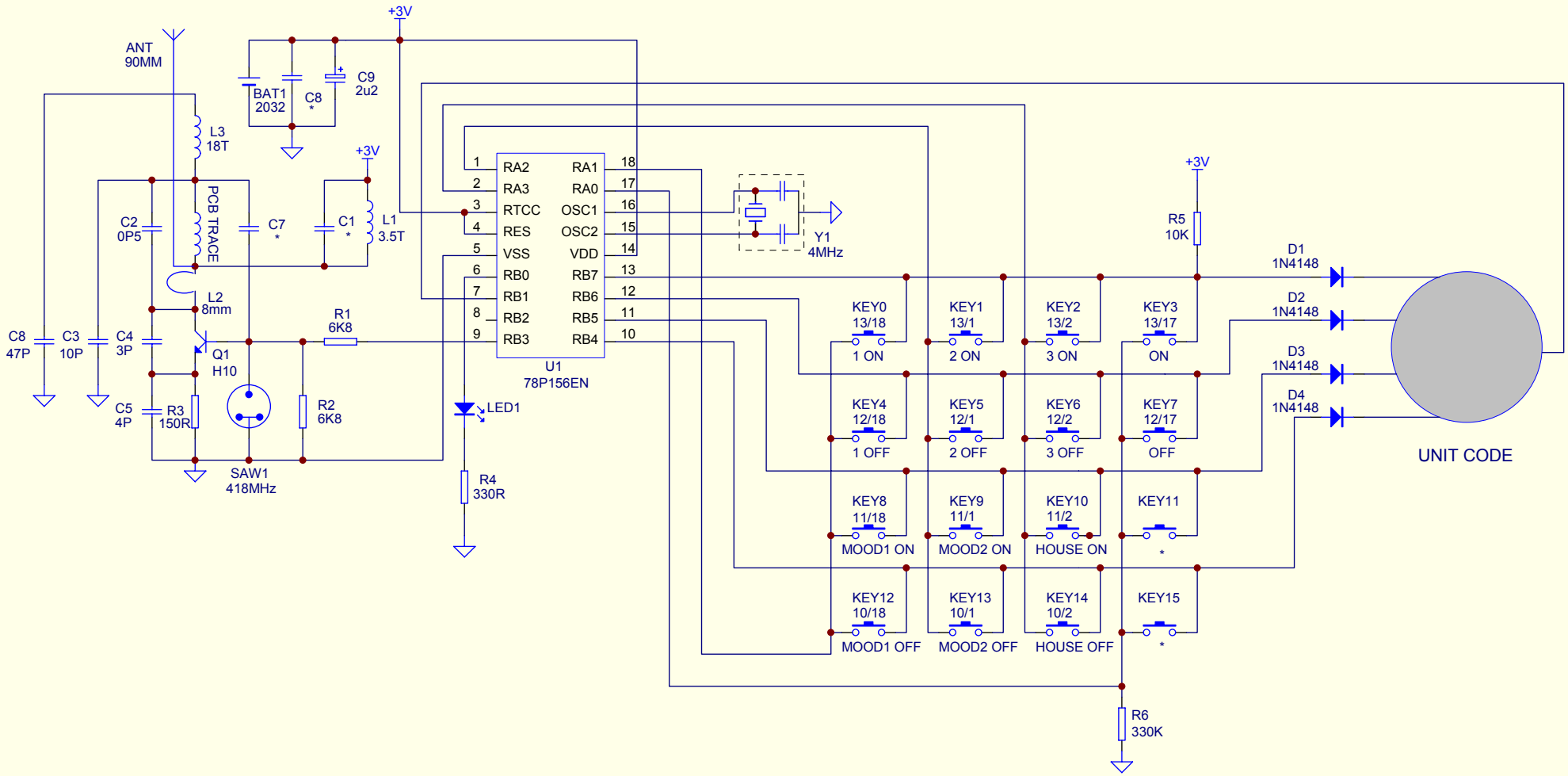

Title	Black & Decker Master Remote	
Size A3	Number 851001H11760	Revision 01
Date: 28-Apr-2003		Sheet of
File: A:\B&D-REMF.SCH		Drawn By: