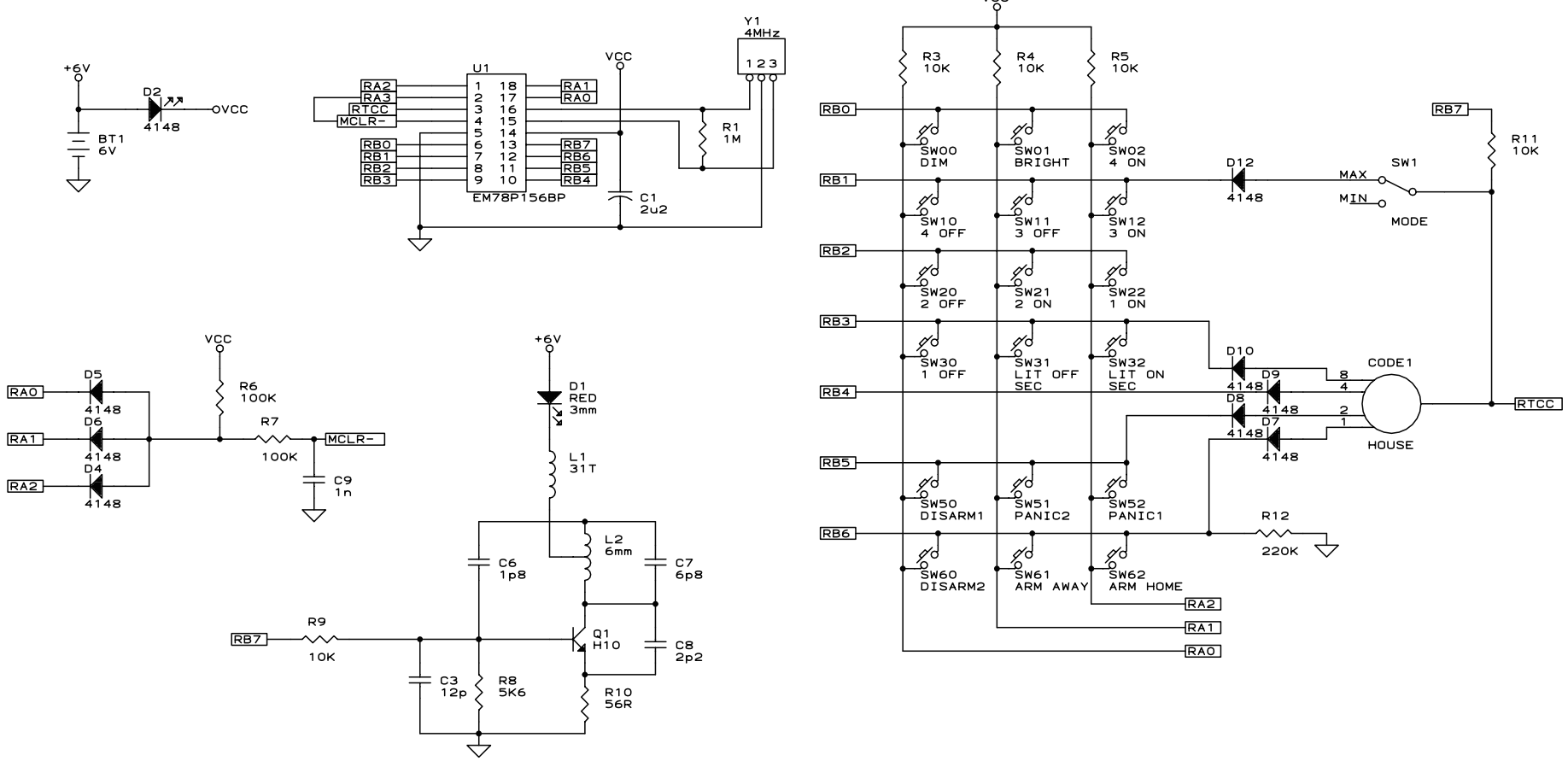

	SYSTEM X10 (HK)
Title	CR14A
Size B	Document Number 851001H11374
Date: August 20, 2001	Sheet 1 of