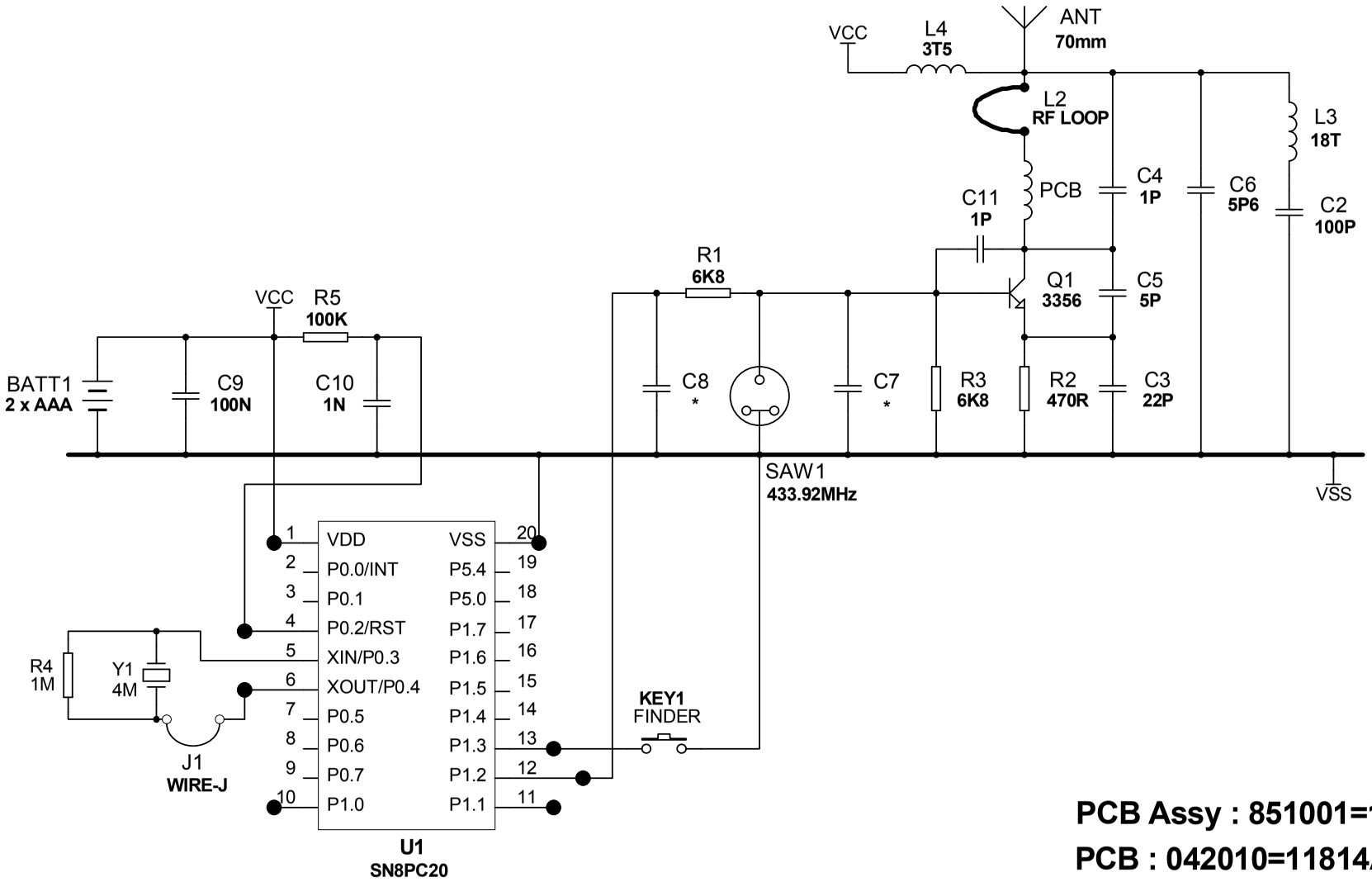

PCB Assy : 851001=13436

PCB : 042010=11814A

Title	**JASCO Findit BASE**		
Size A4	Number		Revision **A**
Date: 22-Jan-2009		Sheet of	
File: G:\RODERICK\SCH\SCH\JASCO_.SCH		Drawn By:	