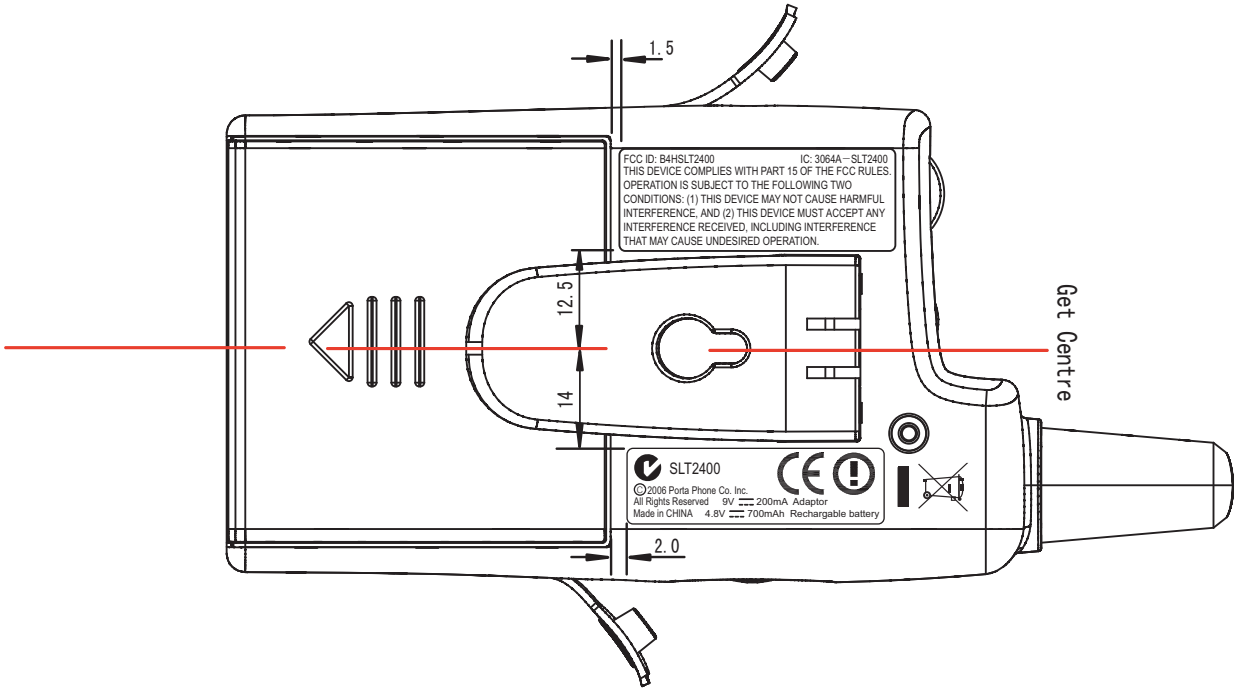
1.5
FCC ID: B4HSLT2400 IC: 3064A－SLT2400
THIS DEVICE COMPLIES WITH PART 15 OF THE FCC RULES.
OPERATION IS SUBJECT TO THE FOLLOWING TWO
CONDITIONS: (1) THIS DEVICE MAY NOT CAUSE HARMFUL
INTERFERENCE, AND (2) THIS DEVICE MUST ACCEPT ANY
INTERFERENCE RECEIVED, INCLUDING INTERFERENCE
THAT MAY CAUSE UNDESIRED OPERATION.
12.5
14
SLT2400
©2006 Porta Phone Co. Inc.
All Rights Reserved 9V 200mA Adaptor
Made in CHINA 4.8V 700mAh Rechargable battery
2.0
Get Centre

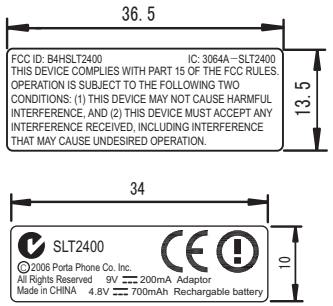
36.5
FCC ID: B4HSLT2400 IC: 3064A－SLT2400
THIS DEVICE COMPLIES WITH PART 15 OF THE FCC RULES.
OPERATION IS SUBJECT TO THE FOLLOWING TWO
CONDITIONS: (1) THIS DEVICE MAY NOT CAUSE HARMFUL
INTERFERENCE, AND (2) THIS DEVICE MUST ACCEPT ANY
INTERFERENCE RECEIVED, INCLUDING INTERFERENCE
THAT MAY CAUSE UNDESIRED OPERATION.
13.5
34
SLT2400
©2006 Porta Phone Co. Inc.
All Rights Reserved 9V 200mA Adaptor
Made in CHINA 4.8V 700mAh Rechargable battery
10

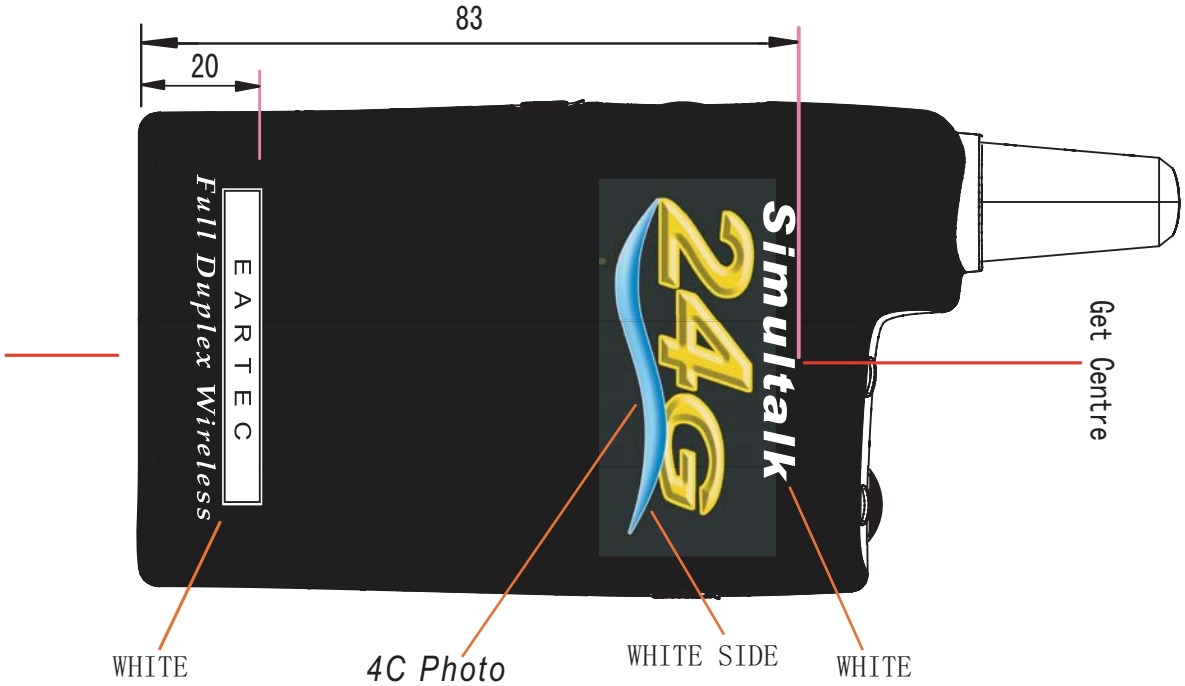
83
20
Simultalk
2.4G
EARTEC
Full Duplex Wireless
Get Centre
WHITE
4C Photo
WHITE SIDE
WHITE

Unit: mm