REVISIONS			
REV	CO/PRN	DATE	BY
-	PRN 137596	2/98	CFH
A	165160	12/99	PWB

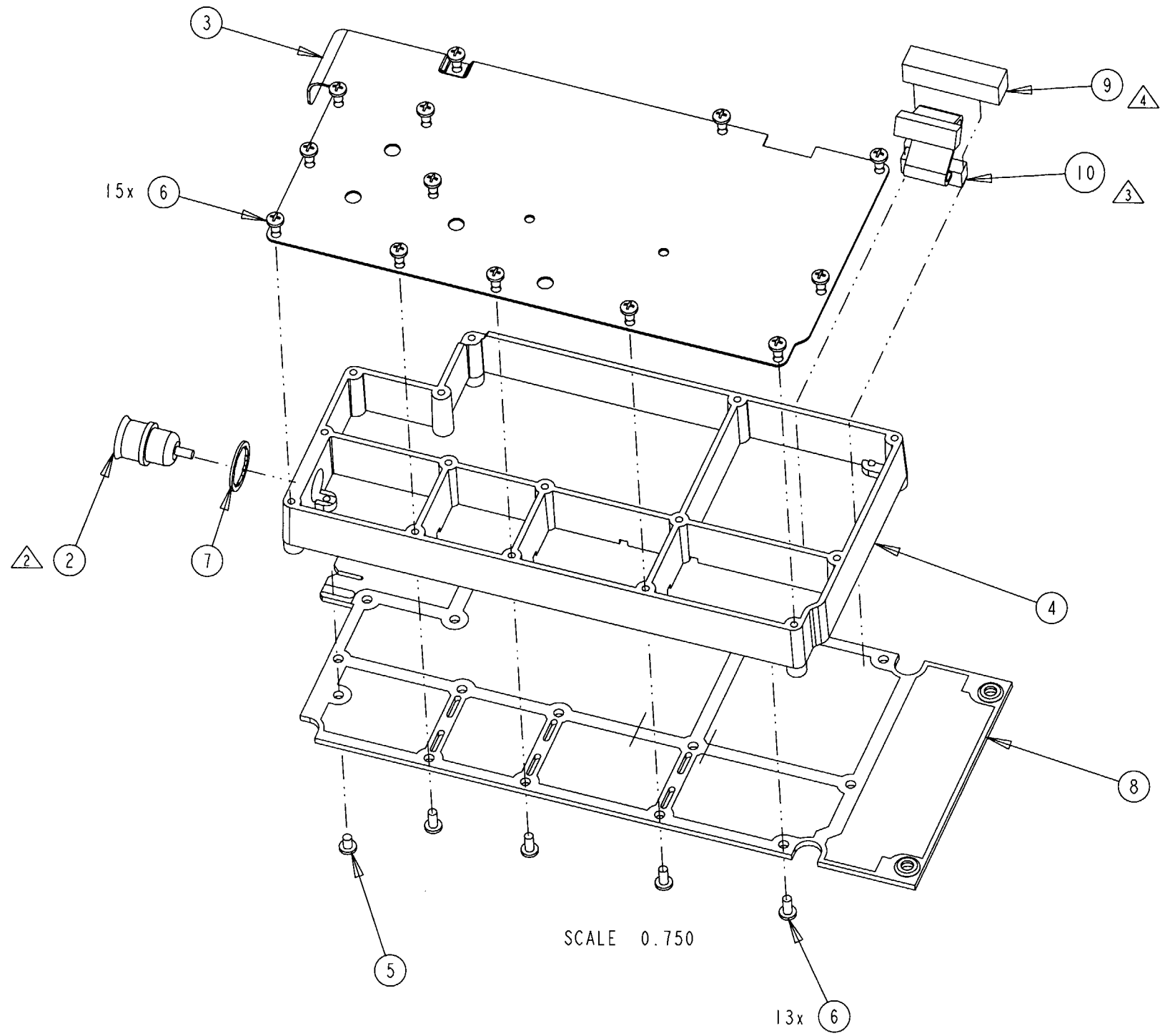

NOTES:

1. LIQUID STAKE ALL FASTENERS PER 001-01080-0000.

2. AFTER INSTALLATION, PREFORM AND SOLDER ITM 1, BUSS WIRE BETWEEN CENTER TERMINAL OF ITM 2 AND E1 PAD ON PC BOARD.

3. INSTALL THE CABLE HOUSING (ITM 10) WITHOUT KEY TO ITM 8 HEADER.

4. MOUNT CUSHION (ITM 9) ON TOP OF HOUSING (ITM 10) TO PREVENT DISCONNECTION DUE TO VIBRATION.

THIS DRAWING IS NOT COMPLETE WITHOUT PARTS LIST 200-09447-0000.

SINGAPORE DISTRIBUTION AUTHORIZED PRINT

200-05661-0000	KX155A	TOL UNLESS NOTED .XX ±0.02 .XXX ±0.010 ANGLES ±0.5°	ME C.HOLMER		AlliedSignal Inc. Olathe, Kansas USA CAGE: 22373
NEXT ASSY	UNIT		EE J.HUNTER		
AlliedSignal PROPRIETARY This document and all information contained herein are the property of AlliedSignal Inc., are provided in confidence, and may not be used, duplicated or disclosed to a third party, in whole or in part, without prior written permission of AlliedSignal Inc. Copyright 1999 AlliedSignal Inc. All rights reserved.		MATERIAL	DRN CFH	SIZE B	NAME GLIDESLOPE ASSEMBLY
			DATE 19-Feb-98		
		FINISH	PRO/E FILENAMES 300-09447-0000.dwg 200-09447-0000 ASSEM	SCALE 0.5	P/N RANGE NONE / DOCUMENT NUMBER 300-09447-0000 / SHT 1 OF 1

1.2 Released