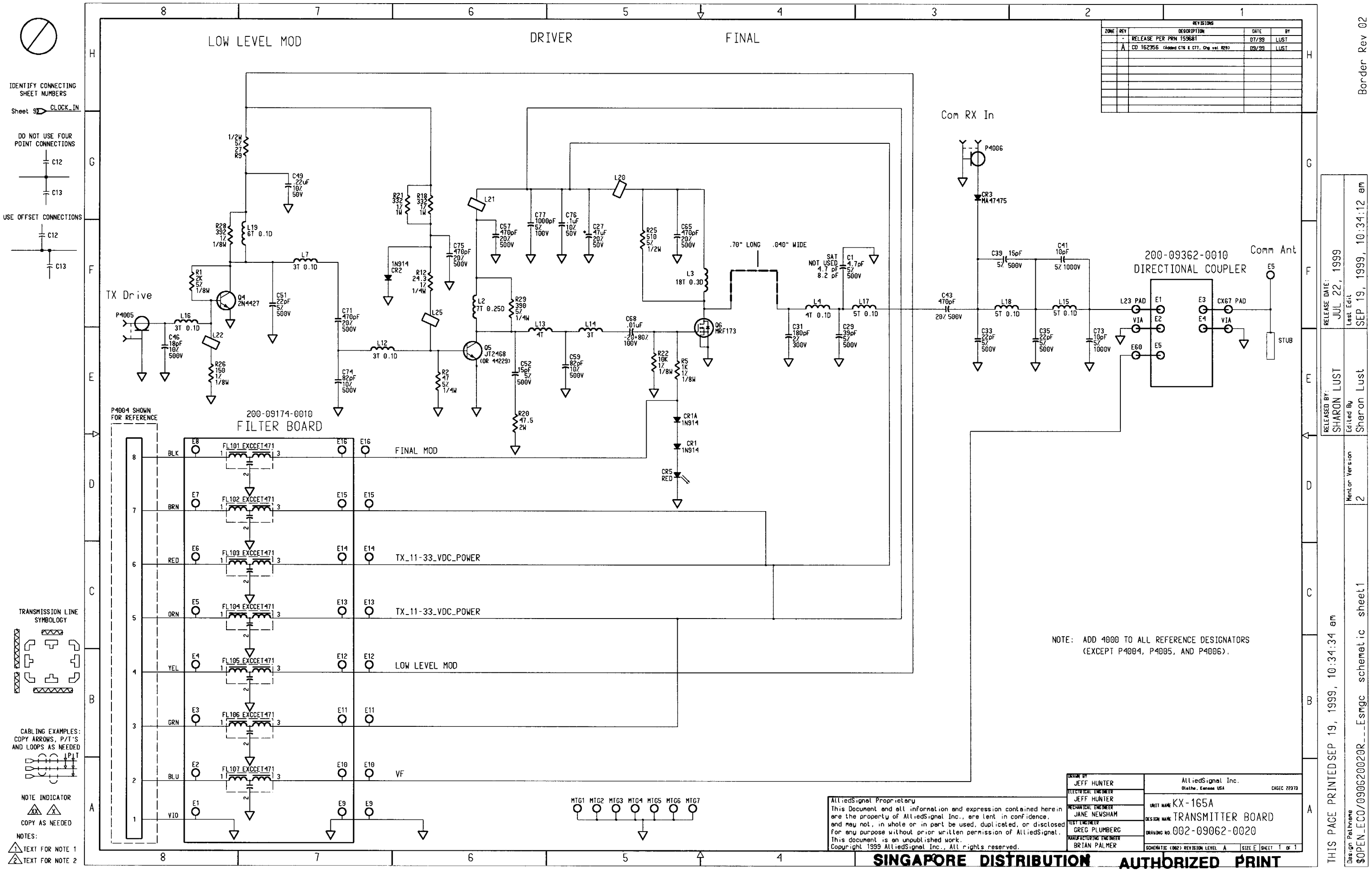

ZONE	REV	DESCRIPTION	DATE	BY
	-	RELEASE PER PRN 159681	07/99	LUST
	A	CO 162356 (Added C76 & C77. Chg val. R29)	09/99	LUST