USED ON: 5357-001

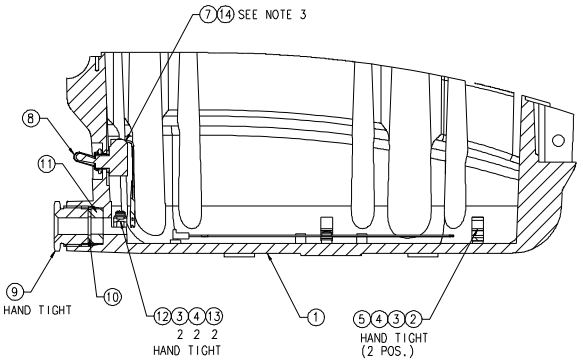

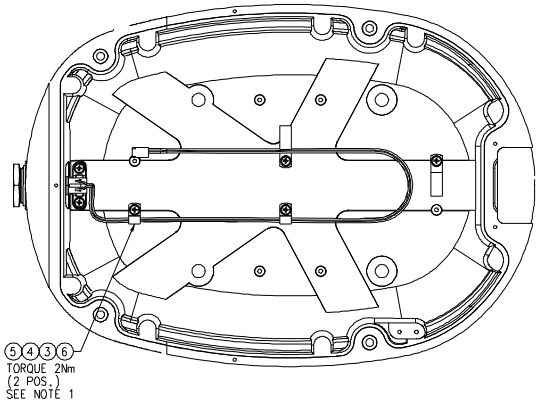

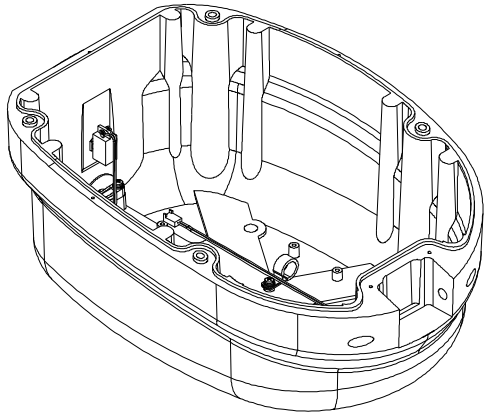

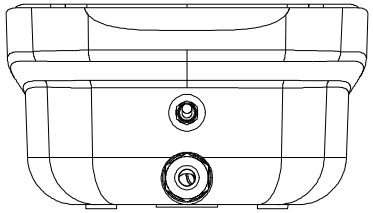

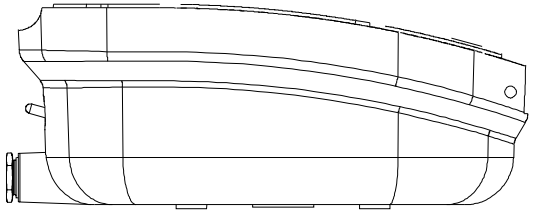

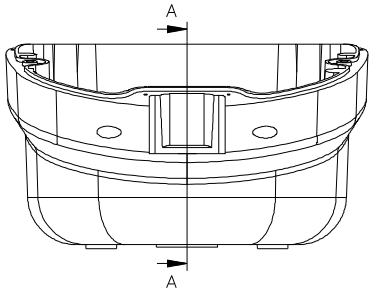

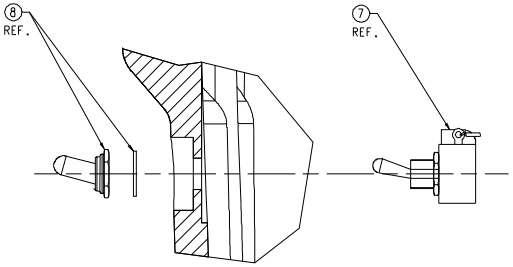

SCRAP VIEW SHOWING SWITCH ASSEMBLY
SCALE 2:1

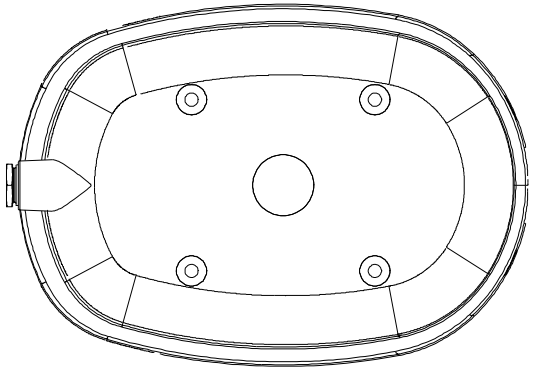

NOTES

1) THE SWITCH HARNESS MUST BE RETAINED WITH THESE TWO CABLE CLAMPS.

(E) 2) THE SWITCH MUST BE FITTED AS FOLLOWS:
SCREW THE SWITCH NUT ONTO THE SWITCH AND
PLACE THE SWITCH THROUGH THE CASTING.
SLIDE THE SWITCH SEAL WASHER ONTO THE SWITCH AND
SECURE THE SWITCH WITH THE SWITCH SEAL TO 1.5Nm.
THE SWITCH MUST BE ASSEMBLED SUCH THAT WHEN THE SWITCH
LEVER IS IN THE UP POSITION THE SWITCH IS CLOSED CIRCUIT.
SEE SCRAP VIEW.

3) AFTER ASSEMBLY THE TWO RECTANGULAR HOLES ON TOP OF THE SWITCH MUST BE
COMPLETELY SEALED WITH RTV. THE TWO SWITCH SOLDER JOINTS MUST BE TOTALLY
ENCLOSED BY RTV. THE CABLE ENDS MUST BE ENCLOSED (3MM MIN) IN RTV TO PROVIDE
STAIN RELIEF.

ITEM No	DRG/PART No	QTY	DESCRIPTION
1	3004-086D	1	LOWER CASTING (MACHINED) (E)
2		2	RICHCO CABLE CLAMP NE9
3		6	M4 PLAIN WASHER STAINLESS STEEL A2 DIN 125A
4		6	M4 SPRING WASHER STAINLESS STEEL A2 DIN 127B
5		4	M4 X 8 CROSS RECESS PAN HEAD SCREW STAINLESS STEEL A2 DIN 7985
6		2	RICHCO CABLE CLAMP N2
7	4357-020B	1	SWITCH ASSEMBLY
8		1	FARNELL SWITCH SEAL 150-212
9	3020-328E	1	CABLE GLAND NUT
10		1	M14 MEDIUM WASHER STAINLESS STEEL A4 DIN 125A
11	3010-355B	1	PEDESTAL CABLE SEAL
12	3001-614C	1	RADOME CABLE CLAMP
13		2	M4 X 16 CROSS RECESS PAN HEAD SCREW STAINLESS STEEL A2 DIN 7985
14		A/R	DOW CORNING 7091 (BLACK) SILICONE SEALANT

PARTS LIST

ISS	DESCRIPTION OF CHANGE	DATE
E	NOTE 2 CHANGED AND ITEM 1 CHANGED. L.D.Y	10.05.99 SM
D	ITEM 14 ADDED, 3 ISSUES UPDATED. NOTE 3 ADDED AND RTV ADDED TO ITEM 7. L.D.Y	25.01.99 SM
C	HARNESS ADDED L.D.Y	11.11.98 SM
B	UPDATED L.D.Y	27.01.98
A	FIRST ISSUE	ORIGINAL

© THE INFORMATION CONTAINED HEREIN SHALL NOT BE REPRODUCED IN WHOLE OR IN PART WITHOUT THE PRIOR WRITTEN PERMISSION OF AUTOHELM.

Autohelm

TOLERANCES UNLESS OTHERWISE STATED
X ±0,50
.X ±0,25
.XX ±0,10
.XXX ±0,05
ANGLES ±1°
DIMENSIONS IN MM

MACHINING: 1,6 SURFACE
SHARP INTERNAL CORNERS TO HAVE RADIUS 0.4 MAX
DEBURR ALL EDGES
SCALE: 1:2

DRAWN TO BS308 DO NOT SCALE - IF IN DOUBT ASK

MATERIAL

FINISH

FROZEN DATE/ISSUE/BY: Not Frozen

DR'N: L.D.Y
DATE: 01.10.97
CK'D: SM
APP'D: SM

TITLE
BASE ASSEMBLY

DRAWING No. 4357-002

SHT 1 OF 1

A 1