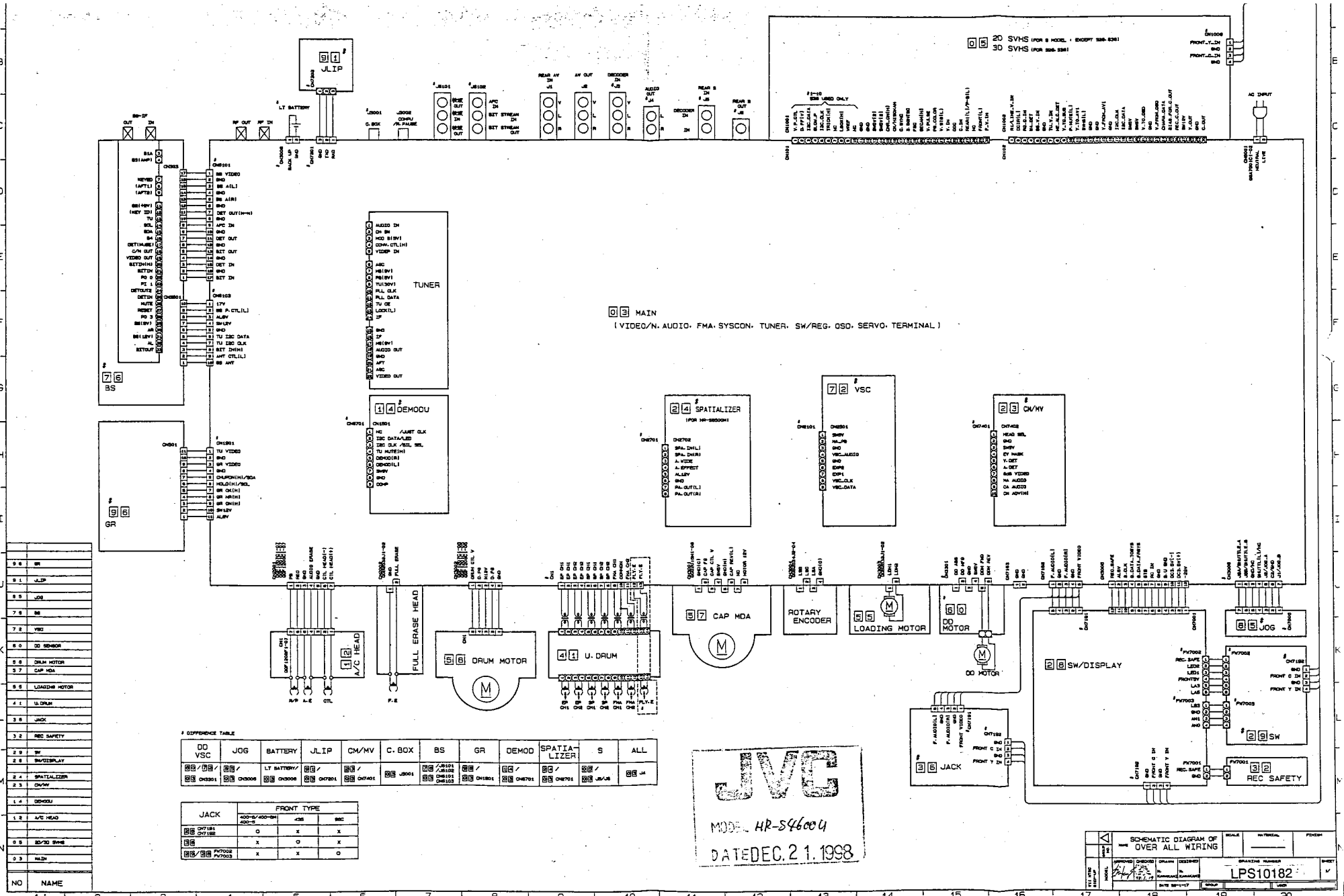

NO	NAME
9 6	GR
9 1	JLIP
8 5	JOG
7 6	BS
7 2	VSC
6 0	DD SENSOR
5 8	DRUM MOTOR
5 7	CAP MDA
5 5	LOADING MOTOR
4 1	U. DRUM
3 6	JACK
3 2	REC SAFETY
2 9	SW
2 8	SW/DISPLAY
2 4	SPATIALIZER
2 3	CM/MV
1 4	DEMODU
1 2	A/C HEAD
0 5	2D/3D SVHS
0 3	MAIN

DIFFERENCE TABLE

DD VSC	JOG	BATTERY	JLIP	CM/MV	C. BOX	BS	GR	DEMOD	SPATIA-LIZER	S	ALL
60/72/ 59 CN3301	85/ 85 CN3006	LT BATTERY/ 85 CN3006	91/ CN7201	23/ CN7401	96 J3001	76/JS101 /JS102 76 CN6101 CN6103	96/ 96 CN1901	14/ 14 CN6701	24/ 24 CN2701	05/ 05 JS/JS	96 J4

JACK	FRONT TYPE		
	400-5/400-6H 400-5	435	880
38 CN7191 CN7192	O	x	x
38	x	O	x
38/38 FN7002 FN7003	x	x	O

REVISIONS

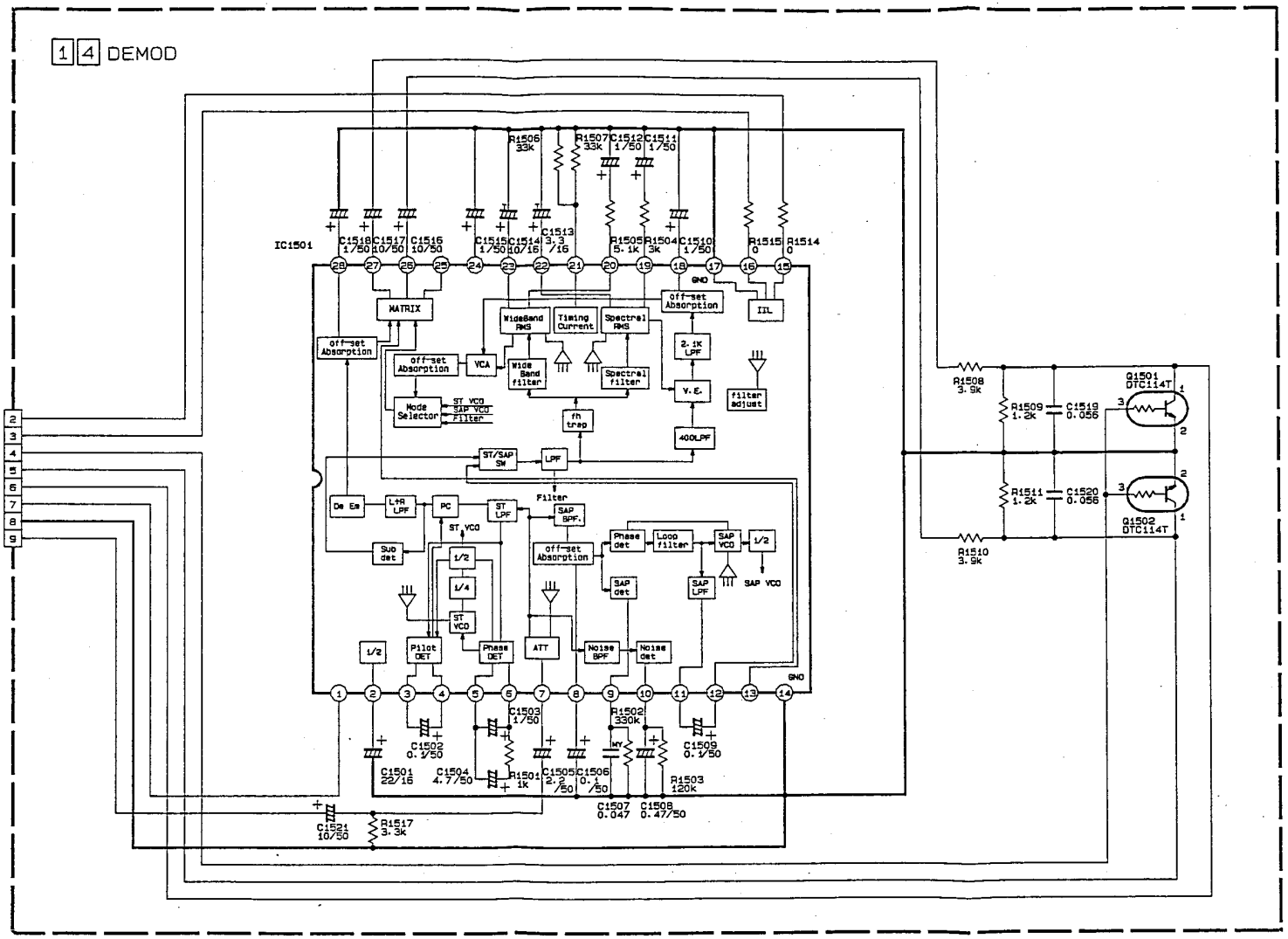

JVC
MODEL HR-S4600U
DATE DEC. 21. 1998

NOTES: UNLESS OTHERWISE SPECIFIED.
ALL RESISTANCE VALUES ARE IN OHMS.
ALL INDUCTANCE VALUES ARE IN H.
ALL CAPACITANCE VALUES ARE IN μF.

ELECTROLYTIC
CERAMIC
TANTAL

LAST NO		VACANT NO
R	1517	1512, 1513, 1516
C	1521	

GROUP NO.	NAME: SCHEMATIC DIAGRAM OF DEMOD			SCALE	MATERIAL	FINISH
MODEL V09 D36 US	APPROVED	CHECKED	DRAWN H. MIYATA	DESIGNED T. MIZUSAWA	DRAWING NUMBER PU97596	SHEET 1/
			DATE 96-3-15		GROUP	USER

98.12.17 18:00

06 ON SCREEN

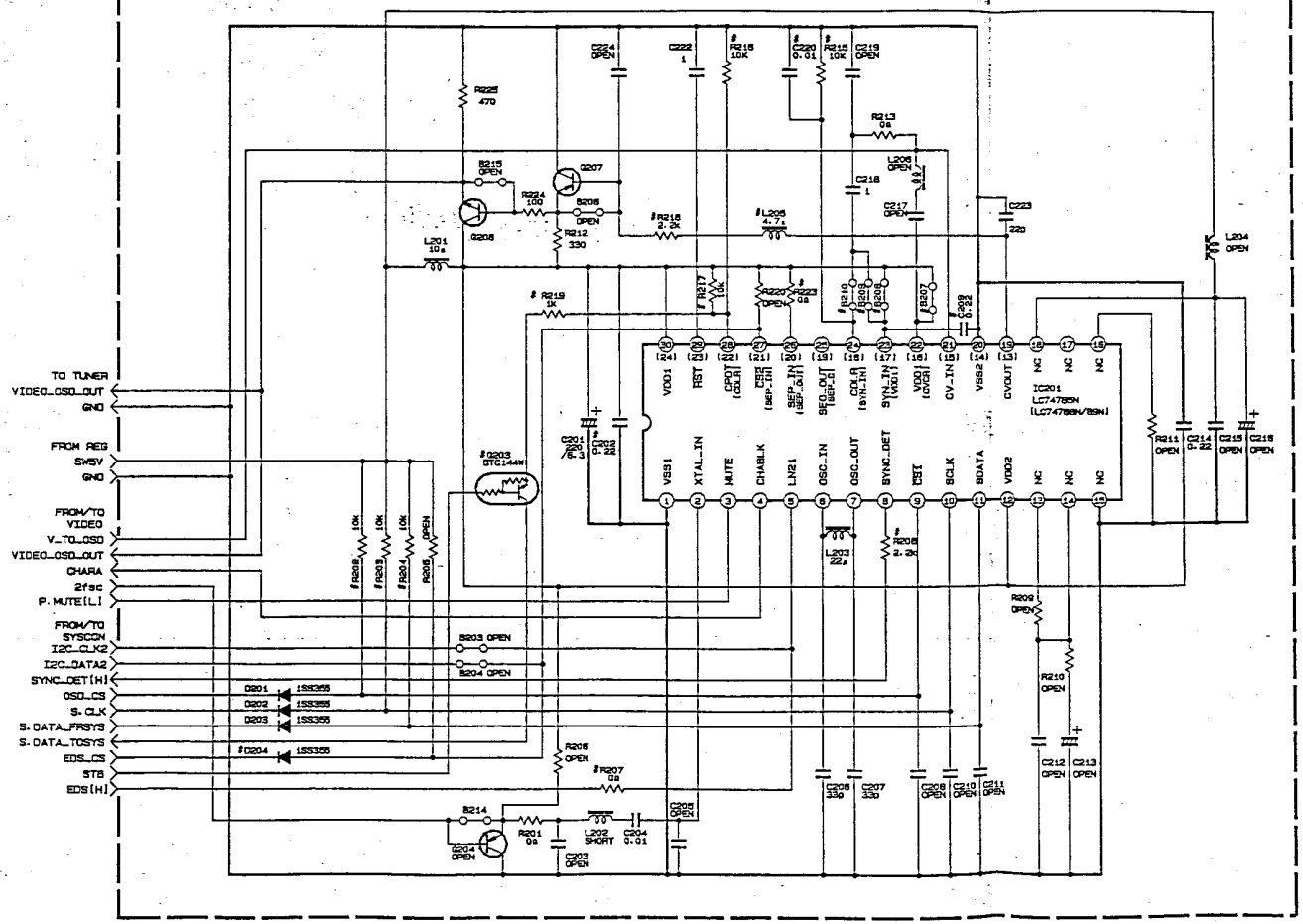

JVC

MODEL HR-S4600U

DATE DEC. 21. 1998

LPS 30048-001

ON SCREEN

REVISIONS

002

ISSUED	'98.4.10	ALE:
HR-S9500U	002	Y. SUGITA

△2 (S-11101) '98.6.17 Y. SUGITA

23 MV/CM ADV

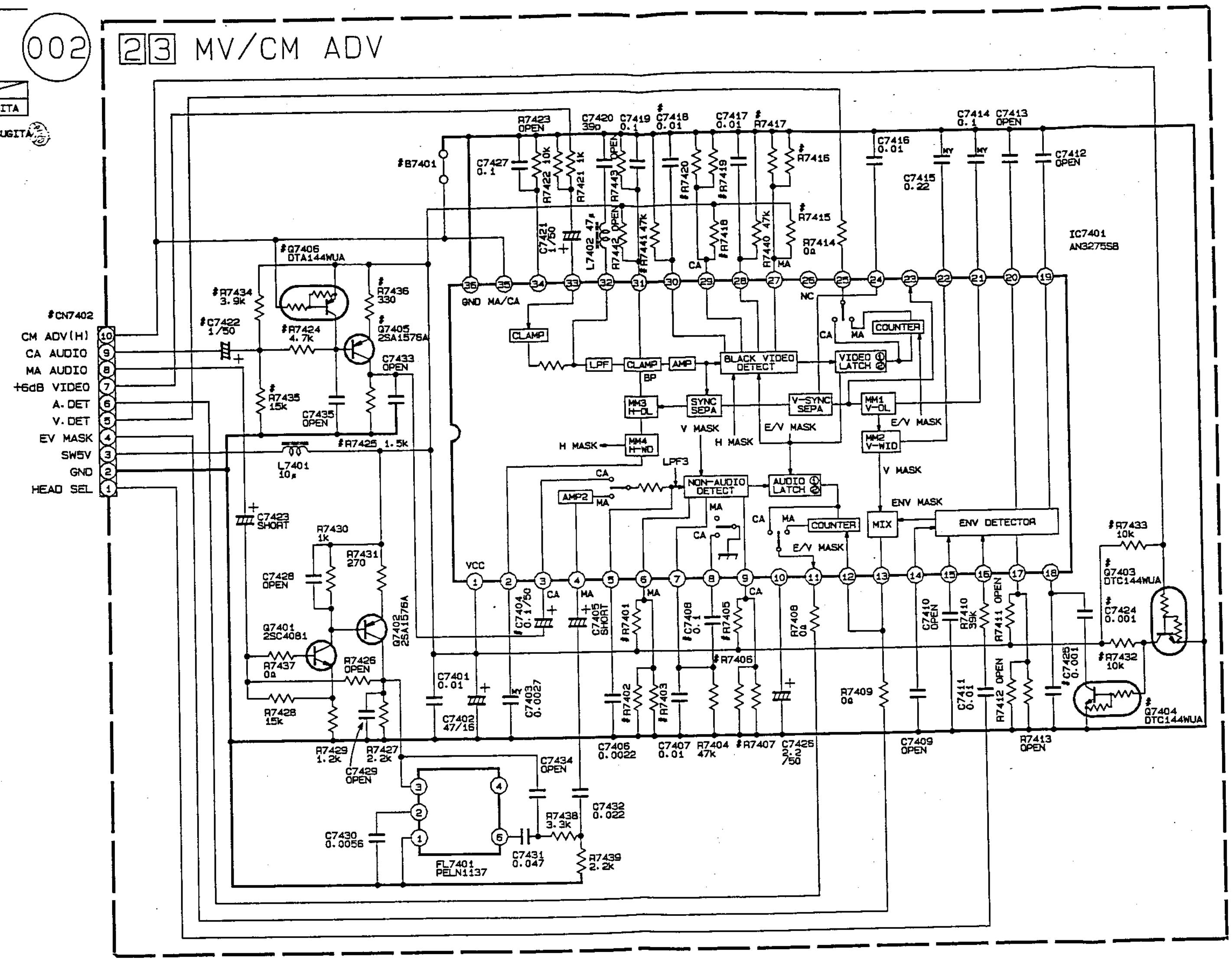

JVC
MODEL HR-S8600U
DATE DEC. 21. 1998

DIFFERENCE TABLE

SYMBOL	MA VHS	MA S-VHS	MA/CA S-VHS
CN7402	1-8	1-8	1-10
B7401	O	O	X
C7404	X	X	O
C7408	X	X	O
C7418	X	X	O
C7422	X	X	O
C7424	X	X	O
C7425	O	O	X
R7401	X	X	X
R7402	X	X	X
R7403	X	X	X
R7405	X	X	82K
R7406	X	X	12K
R7407	X	X	X
R7415	X	X	X
R7416	X	X	X
R7417	X	X	X
R7418	X	X	X
R7419	X	X	X
R7420	X	X	X
R7424	X	X	O
R7425	X	X	O
R7432	X	X	O
R7433	X	X	O
R7434	X	X	O
R7435	X	X	O
R7436	X	X	O
R7441	X	X	O
Q7403	X	X	O
Q7404	X	X	O
Q7405	X	X	O
Q7406	X	X	O

NOTES: UNLESS OTHERWISE SPECIFIED.
ALL RESISTANCE VALUES ARE IN OHMS.
ALL INDUCTANCE VALUES ARE IN H.
ALL CAPACITANCE VALUES ARE IN μF.

ELECTROLYTIC
CERAMIC
MYLER

NAME	SCHEMATIC DIAGRAM OF MV/CM ADVANCE	SCALE	MATERIAL	FINISH
MODEL V11US	GROUP NO.			
APPROVED: T. Sugita '98.6.17	CHECKED: '98.6.17	DRAWN: Y. SUGITA	DESIGNED: Y. SUGITA	
DATE 98-4-10	DRAWING NUMBER LPS30029	SHEET 2/	GROUP	USER

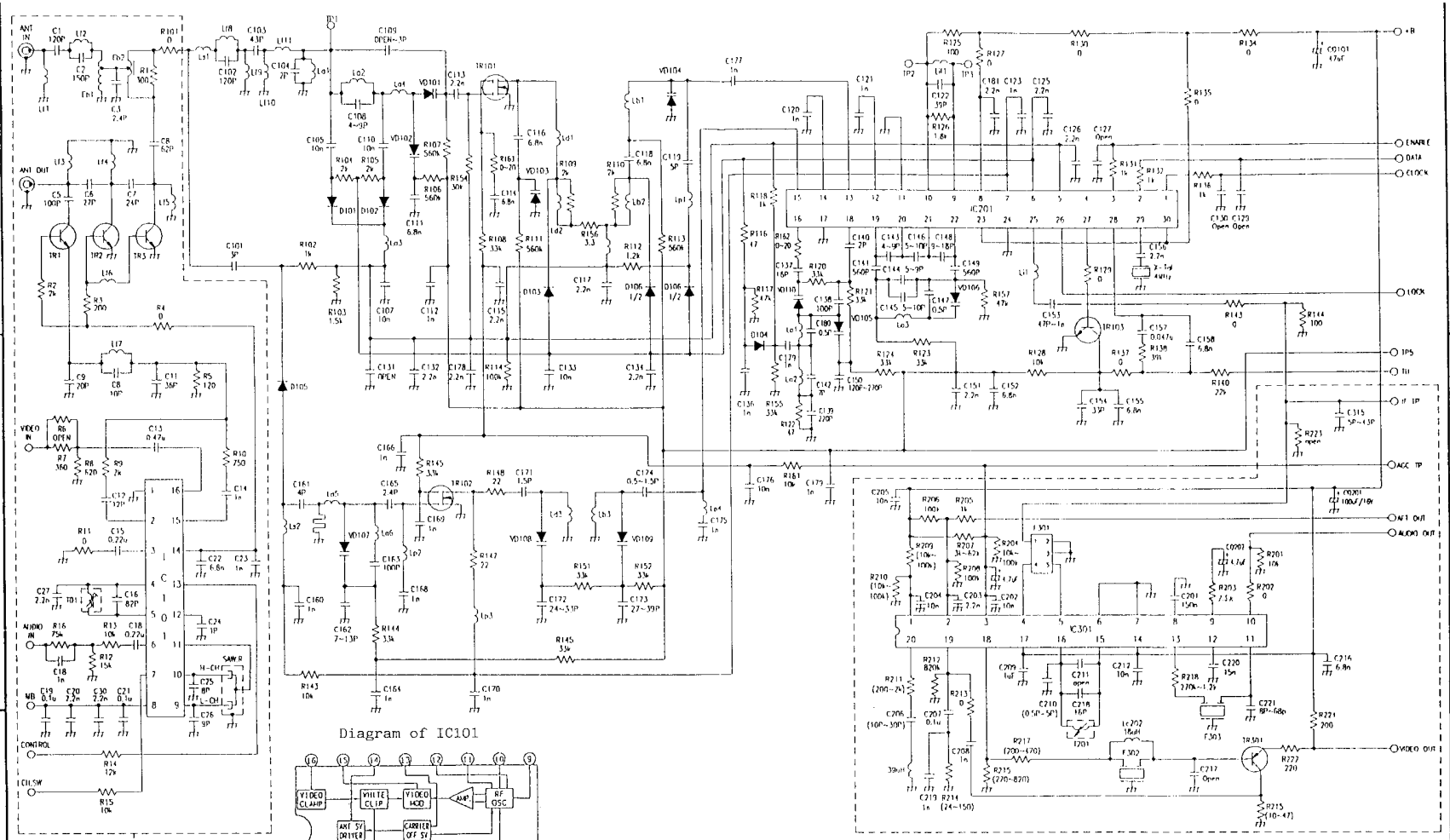

RF converter / Switch sectioin

Diagram of IC101

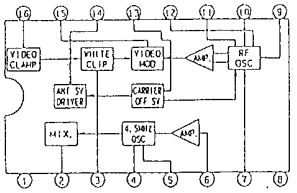

NOTES

1. Unless otherwise specified. All resistors are in ohm. Capacitors are in farad. Inductors are in henry.
2. Semiconductors are as follows

TR1,2,3 : 2SC2735, 2SC4713K
TR101 : BB305C, BF1105R, BF1005R, BB304C
TR102 : BF1105R, BF1005R
TR103 : 2SC4116
TR301 : 2SA1774SA

VD101~109 : HVC200A
VD110 : HVC202
D101~D105 : HSC277
D106 : 1SS313, DAP236U

IC101 : HA11560FP
IC201 : CXA3235N, CXA3250N
IC301 : M52761
F301 : M1865D, F072BPL
F302 : TPS4.5MB, TPS4.5MC, TPS4.5MWA
F303 : SFSH4.5MC, SFSHA4.5MD, SFE4.5MC

	SUPPLY VOLTAGE
+B	5V
TU	33V
MB	5V

HR-VP6740
JAN. 25. 1999

Name	RF converter / Switch (Tuner unit)
Drawing No.	QAU0142-x

USE OF OTHER DIV.

REVISIONS

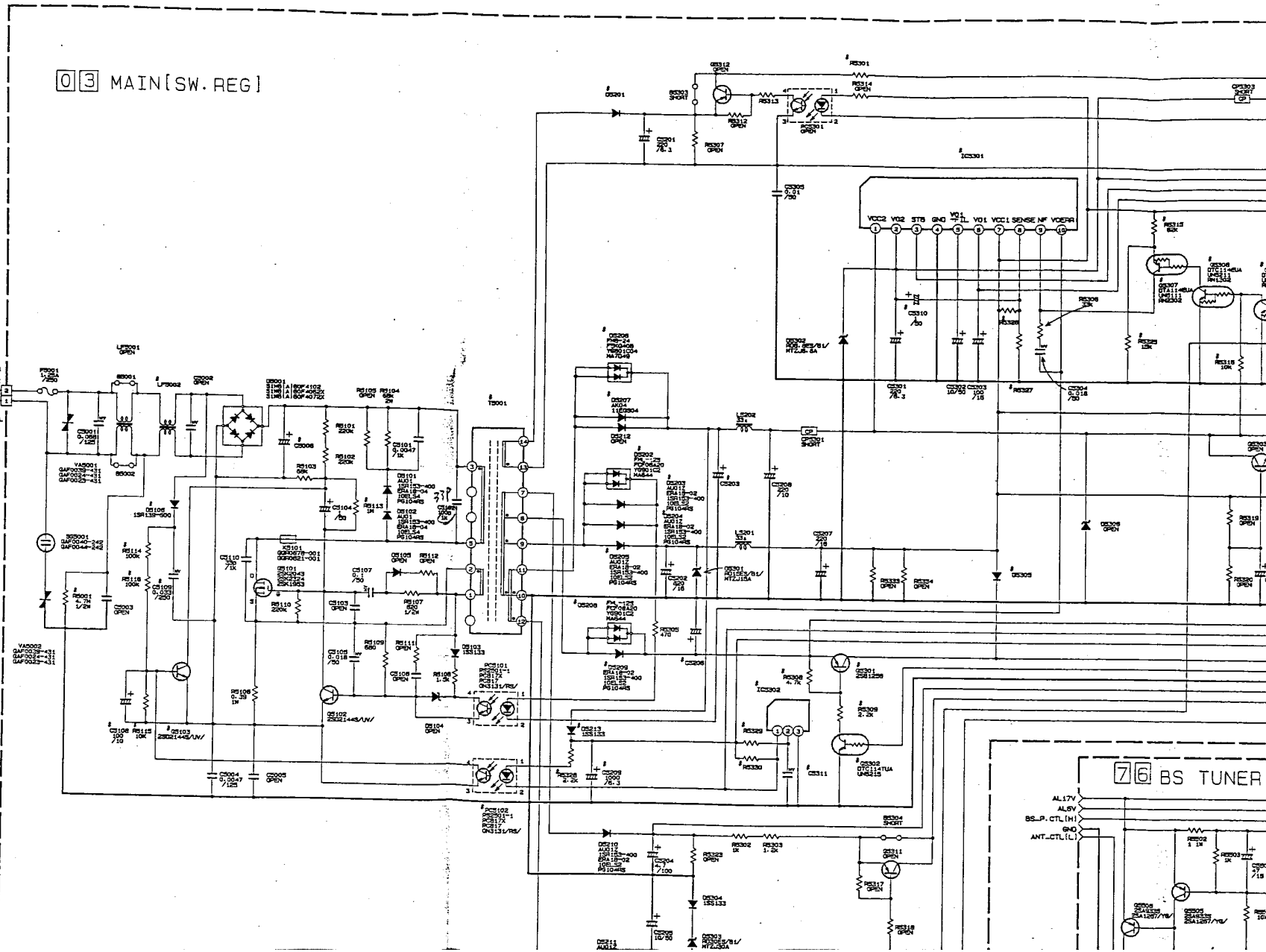

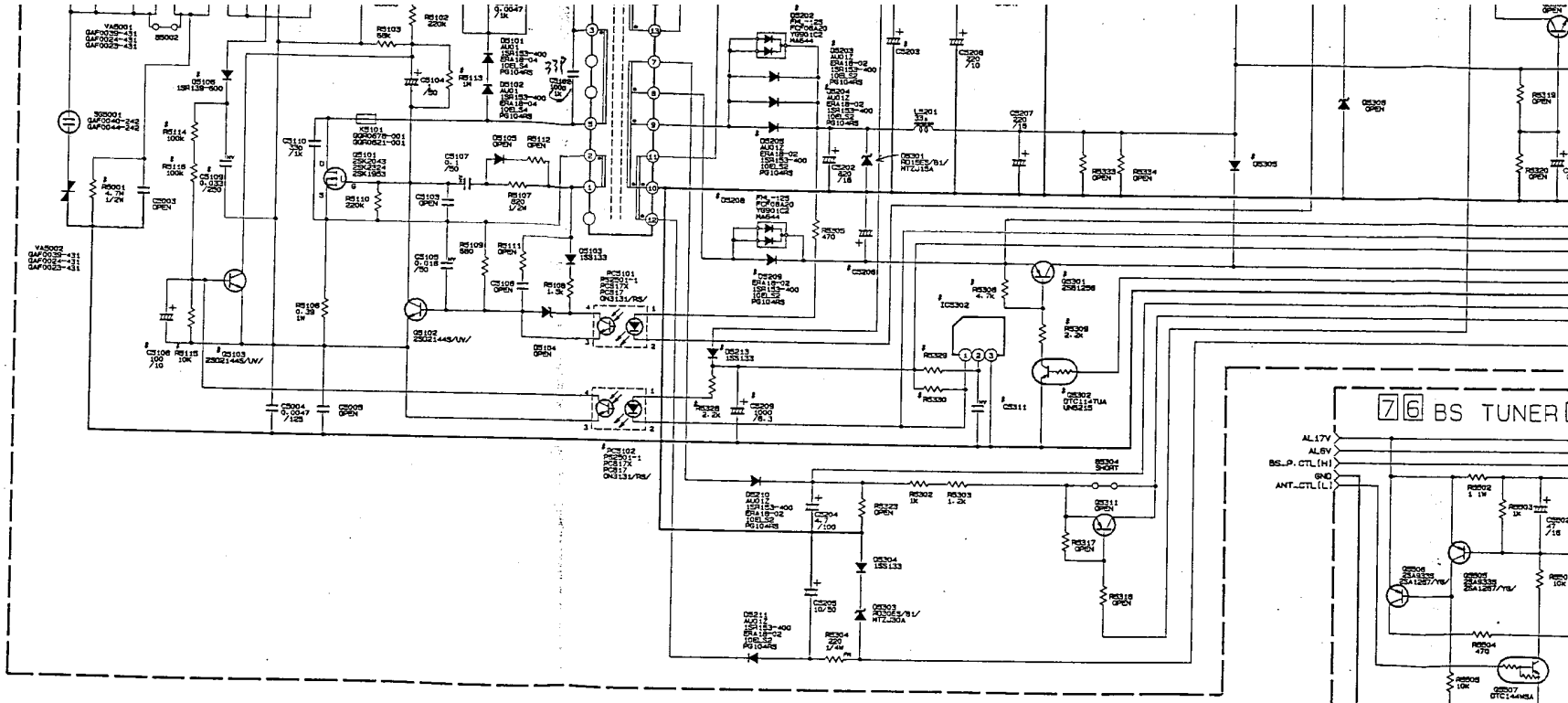

DIFFERENCE TABLE

	C5006	D5202	D5203 D5204 D5205	D5206	D5207	D5208	D5209	C5203	C5206	B3 RES	L5301	D5102 D5103 D5104 D5105	R5114 R5115 R5116	R5103 C5102	R5328 R5308	IC5302 R5329 R5330	C5311	R5307 R5308 R5309	R5314 R5315 R5316	R5306 R5310 R5311	D5308 D5310	B5301	B5306
31	150/200	NO	YES	YES	NO	NO	YES	1200/10	180/25	NO	100u	YES				NO		YES		YES		NO	YES
35	150/200	NO	YES	YES	NO	YES	NO	1500/10	330/25	YES	SHORT	YES				NO		YES		YES		NO	YES
356	150/200	YES	NO	YES	NO	YES	NO	2200/10	330/25	YES	SHORT	NO				NO		YES		YES		NO	YES
366	150/200	YES	NO	YES	NO	YES	NO	2700/10	330/25	YES	SHORT	NO				NO		YES		YES		NO	YES
376	150/200	YES	NO	YES	NO	YES	NO	2700/10	330/25	YES	SHORT	NO				NO		YES		YES		NO	YES
02U	62/200	NO	YES	NO	YES	NO	NO	680/10	NO	NO	100u	NO				NO		NO		NO		YES	NO
31U-315U-326U	150/200	NO	YES	YES	NO	NO	NO	1200/10	NO	NO	100u	NO				NO		NO		NO		YES	NO
336U	150/200	NO	YES	YES	NO	NO	NO	1200/10	NO	NO	100u	NO				NO		NO		NO		YES	NO

DIFFERENCE TABLE

	LF5002
B2 356 376	0GR0928-001 0GR0984-001
OTHER	0GR0532-001 0GR0533-001 0GR0715-001 0GR0819-001 0GR0827-001

DIFFERENCE TABLE

	T5001	R5001
D	0GS0037-002 0GS0031-002	NO
U	0GS0039-001 0GS0031-002	YES
OTHER	0GS0039-001 0GS0031-002	NO

DIFFERENCE TABLE

	D5301 D5302 D5303	D5305
WITH TURBO SEARCH	YES	1SS53 ERA15-02
WITHOUT TURBO SEARCH	NO	SHORT

DIFFERENCE TABLE

	IC5301	R5326	R5327	C5310
D2(U)	LA6613	SHORT	NO	NO
OTHER	LA5634	NO	NO	YES

DIFFERENCE TABLE

	R5113
PCEC	YES
OTHER	NO

DIFFERENCE TABLE

	D5201	R5301
LEVEL IND. YES	AK04 1SE0504	1
LEVEL IND. NO	AU017 10EL32	SHORT

NOTES: UNLESS OTHERWISE
ALL RESISTANCE VALU
ALL INDUCTANCE VALU
ALL CAPACITANCE VALU

ELECTROLY
CERAMIC
MYLER
NON POLAR

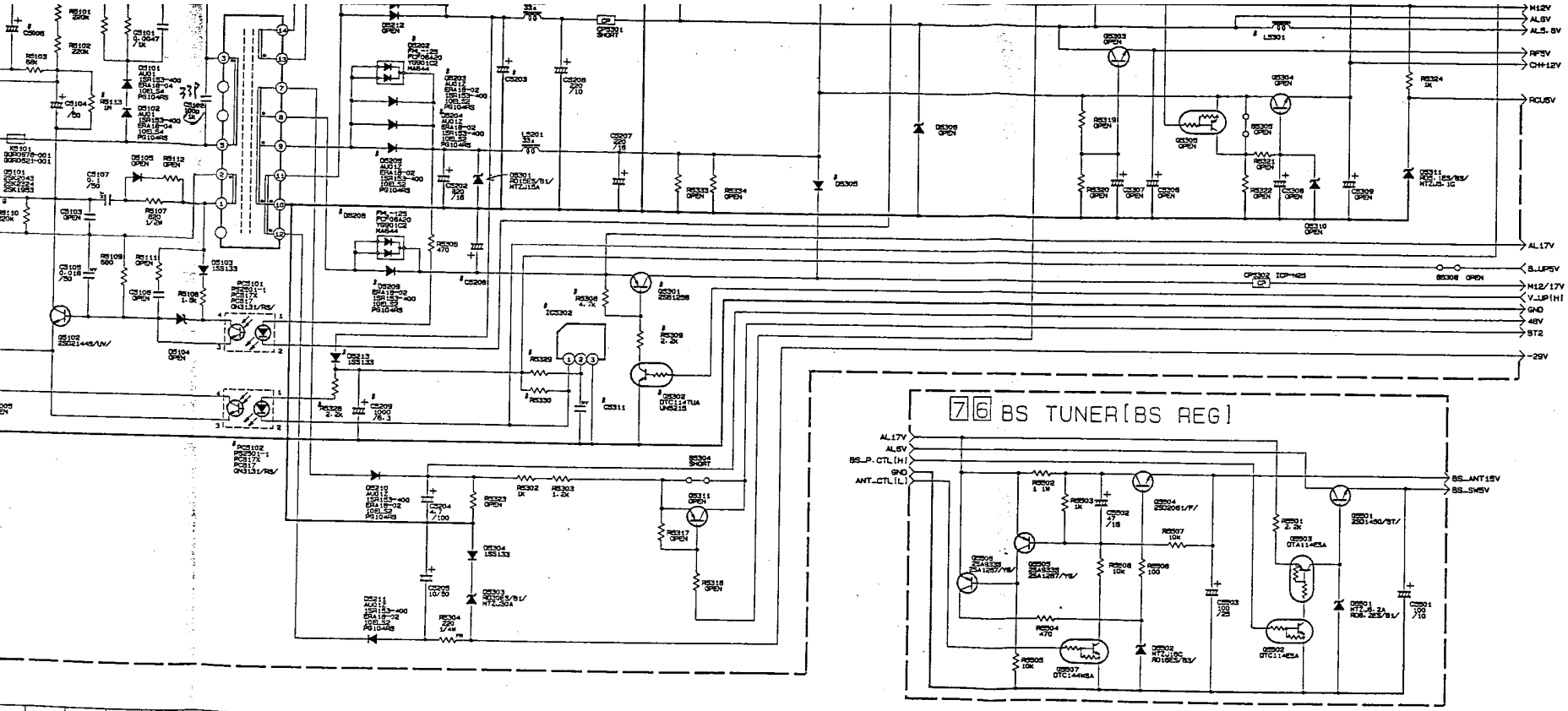

803	C5206	BS REG	L5301	D5106 D5108 D5109 R5114 R5116 R2103 R2102 R5328 R5308	IC5302 R5329 R5330 C5311	D5307 D5304 D5305 R5313 R5315 R5316	D5306 R5310 D5310	R5301	R5306	
0/10	180/25	NO	100u	YES	NO	YES	YES	NO	YES	
0/10	330/25	YES	SHORT	YES	NO	YES	YES	NO	YES	
0/10	330/25	YES	SHORT	NO	NO	YES	YES	NO	YES	
0/10	330/25	YES	SHORT	NO	NO	YES	YES	NO	YES	
/10	NO	NO	100u	NO	NO	YES	YES	NO	YES	
0/10	NO	NO	100u	NO	NO	NO	NO	YES	NO	
0/10	NO	NO	100u	NO	NO	NO	NO	YES	NO	

E TABLE

	D5301 D5302	R5308 R5309	D5305
RCH	YES		11E32 ERA15-02
RCH	NO		SHORT

DIFFERENCE TABLE

	IC5301	R5326	R5327	C5310
D2(U)	LA5613	SHORT	NO	NO
OTHER	LA5634	NO	NO	YES

DIFFERENCE TABLE

	R5113
PCEC	YES
OTHER	NO

DIFFERENCE TABLE

	D5201	R5301
LEVEL IND. YES	AK04 11E2504	1
LEVEL IND. NO	AU017 10EL32	SHORT

NOTES: UNLESS OTHERWISE SPECIFIED.
ALL RESISTANCE VALUES ARE IN OHMS.
ALL INDUCTANCE VALUES ARE IN H.
ALL CAPACITANCE VALUES ARE IN μF.
ELECTROLYTIC
CERAMIC
MYLER

JVC
MODEL HR-S4600U
DATE DEC. 21. 1998

GROUP NO.	NAME SCHEMATIC DIAGRAM OF SW. REG		SCALE	MATERIAL	FINISH	
MODEL	APPROVED	CHECKED	DRAWN	DESIGNED	DRAWING NUMBER LDS10177	SHEET K

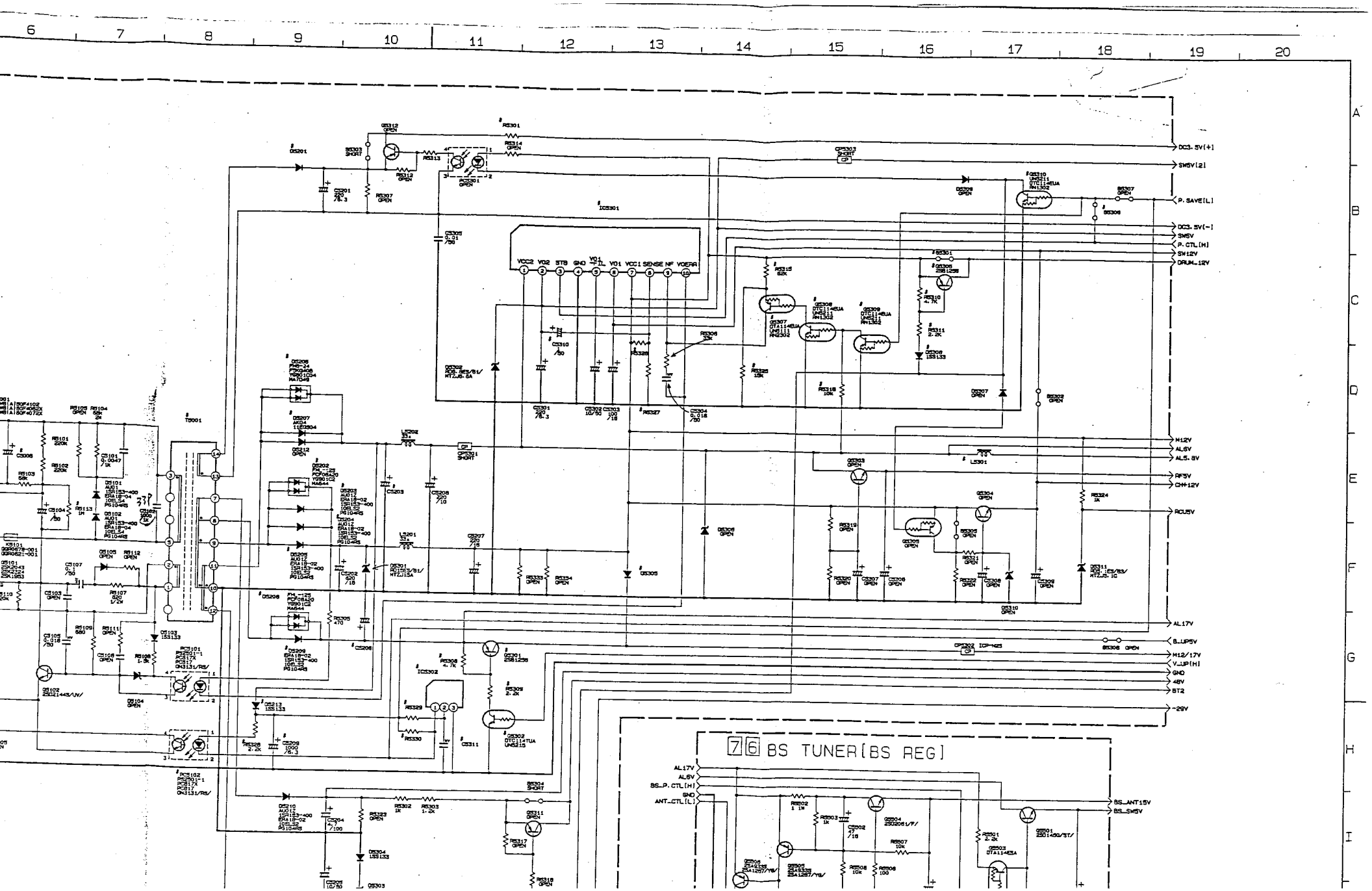
DC3.5V(+)
SW5V(2)
P.SAVE(L)
DC3.5V(-)
SW5V
P.CTL(H)
SW12V
DRUM.12V
M12V
AL6V
AL5.8V
RF5V
CH+12V
RCU5V
AL17V
B.UP5V
M12/17V
V.UP(H)
GND
48V
BT2
-29V
76 BS TUNER(BS REG)
AL17V
AL6V
BS_P.CTL(H)
GND
ANT_CTL(L)
BS_ANT15V
BS_SW5V

03 MAIN[VIDEO/N.AUDIO]

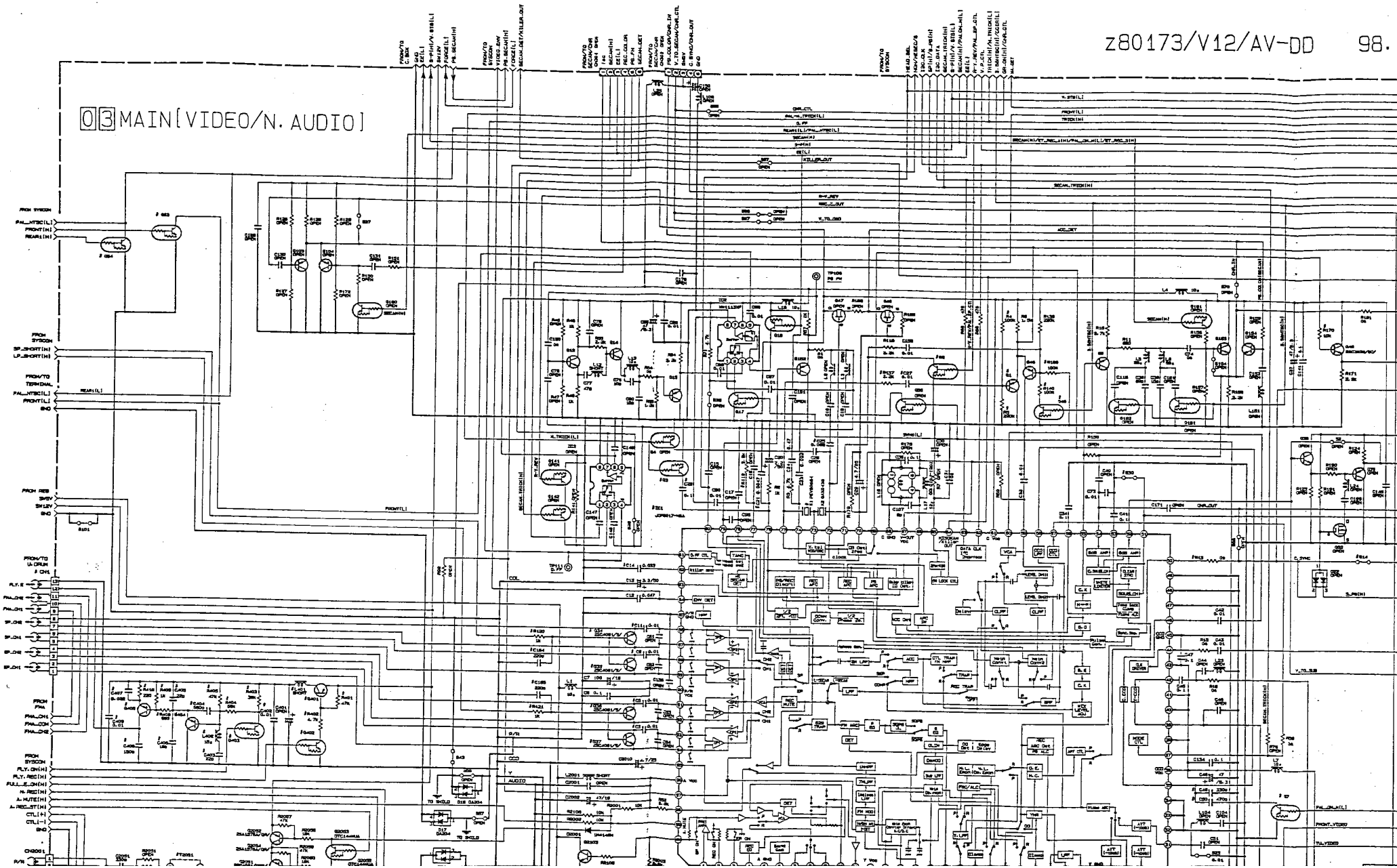

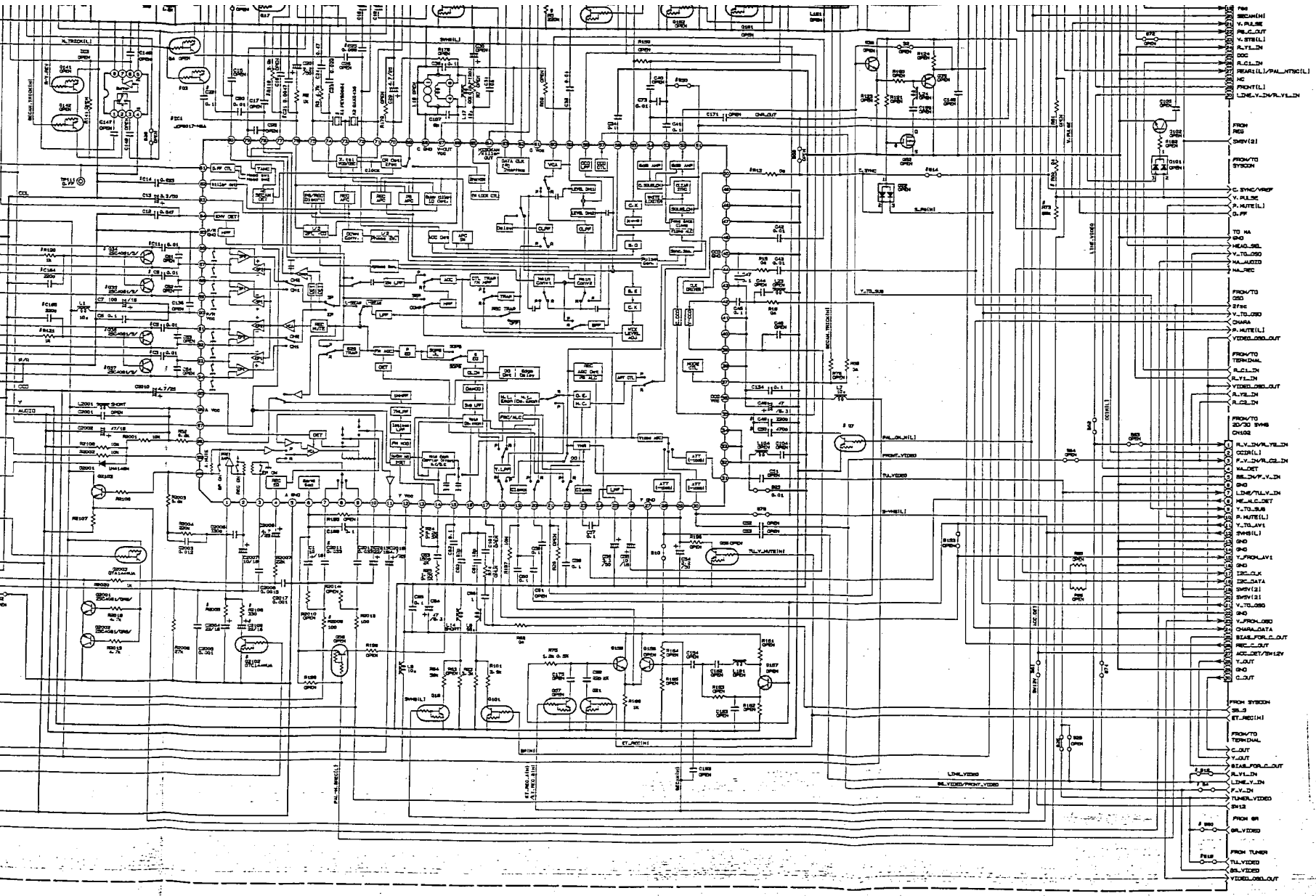

JVC

MODL HR-S4600 U

DATE DEC. 21. 1998

LPS 10179-001

VIDEO/N. AUDIO

z80173/V12/AV-DD 98.12.17 18:00

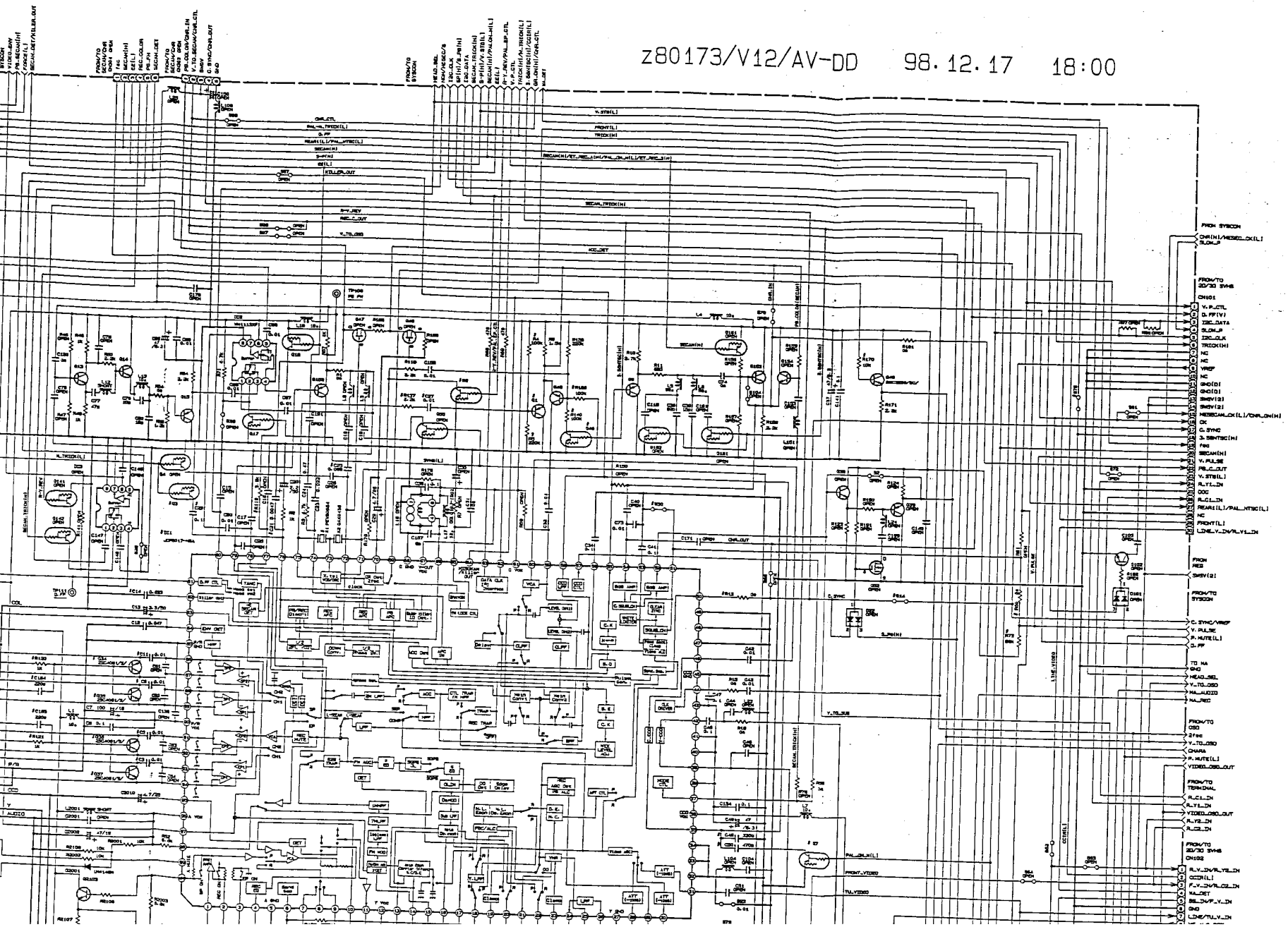

USE OF OTHER DIV.

REVISIONS

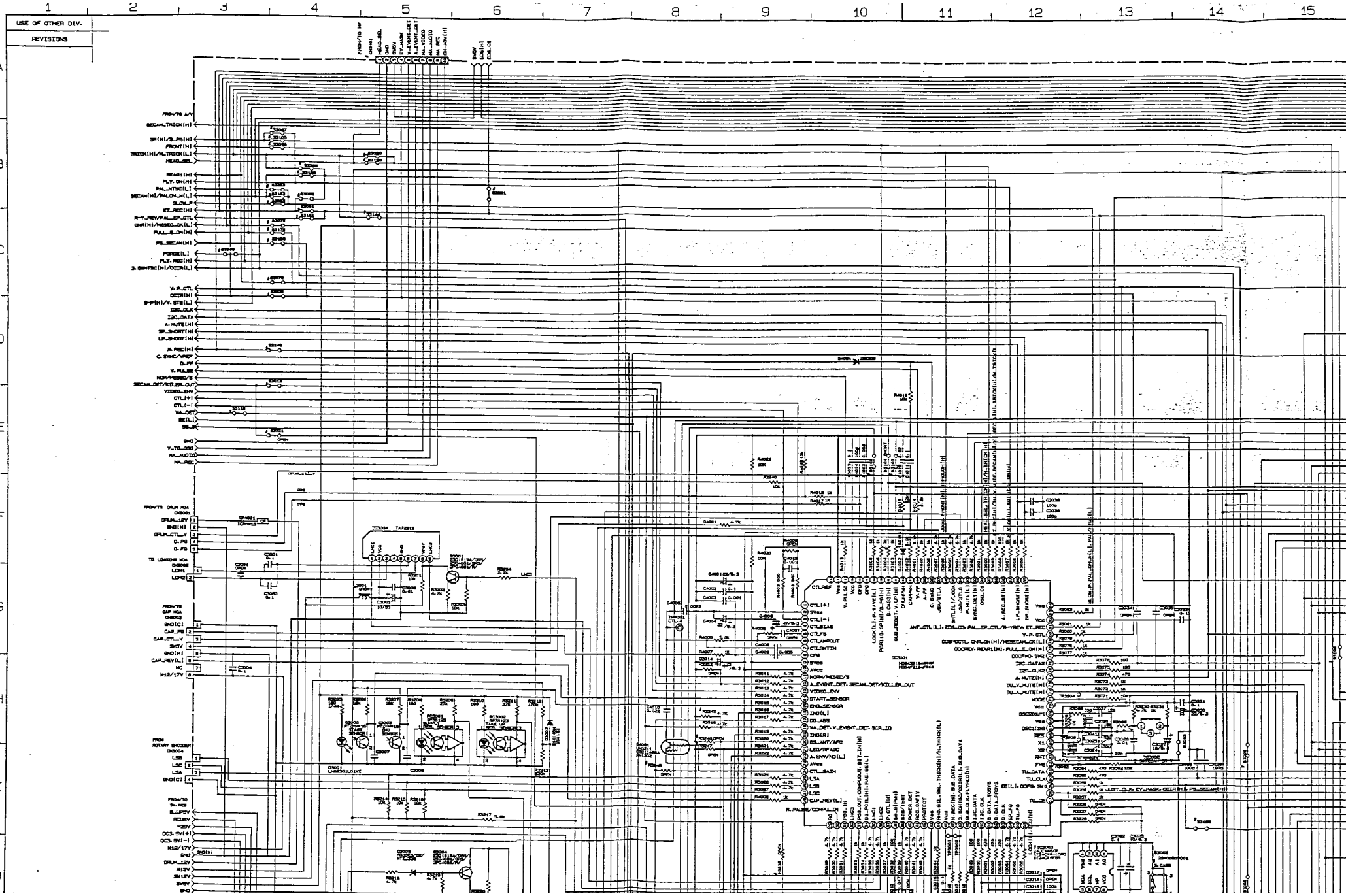

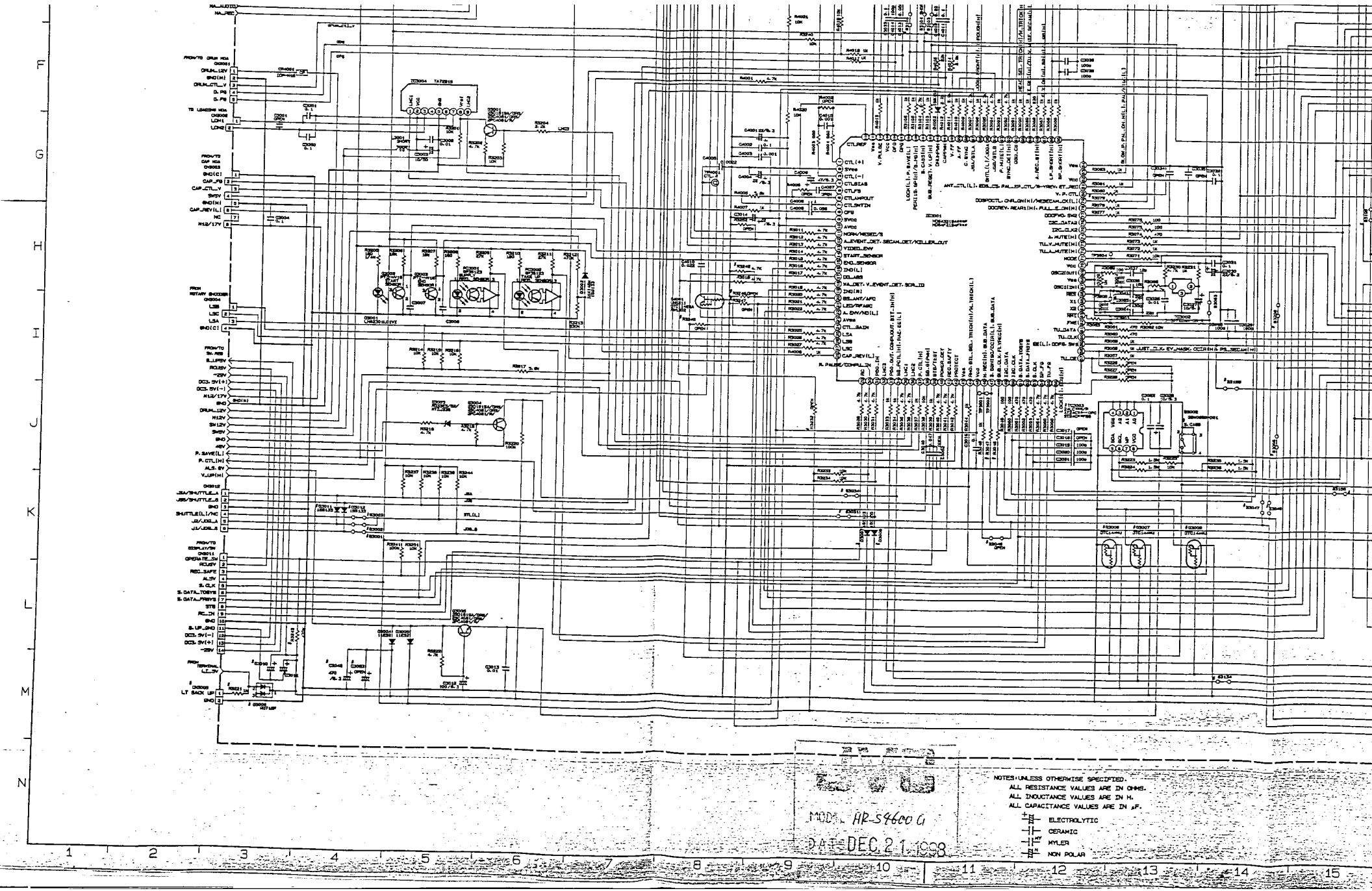

MODEL HR-S4600 G

DATE DEC. 21 1998

NOTES: UNLESS OTHERWISE SPECIFIED.
ALL RESISTANCE VALUES ARE IN OHMS.
ALL INDUCTANCE VALUES ARE IN H.
ALL CAPACITANCE VALUES ARE IN μF.

ELECTROLYTIC
CERAMIC
MYLER
NON POLAR

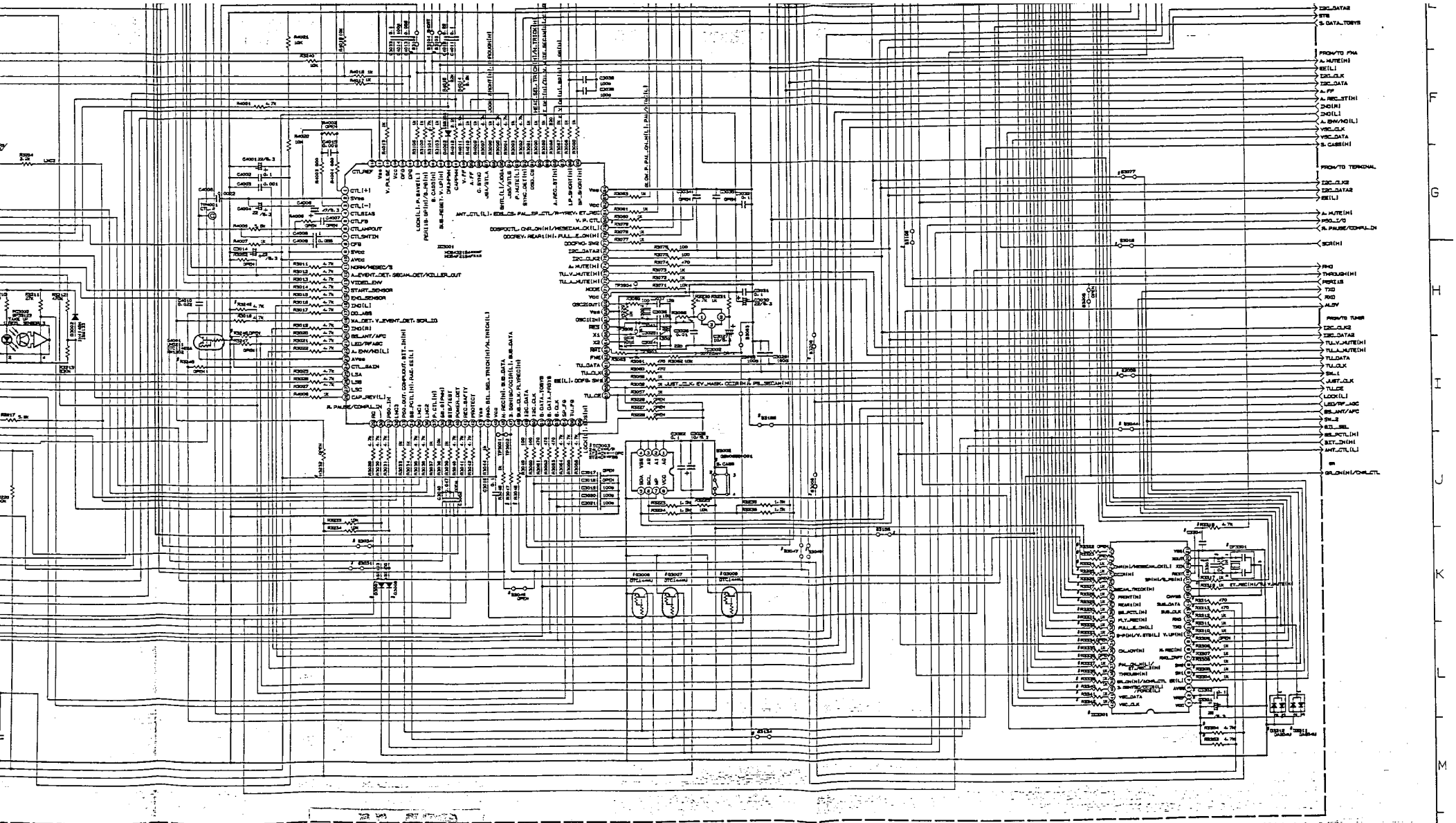

MODEL HR-S4600 G

DATE DEC.21.1998

NOTES: UNLESS OTHERWISE SPECIFIED.
ALL RESISTANCE VALUES ARE IN OHMS.
ALL INDUCTANCE VALUES ARE IN H.
ALL CAPACITANCE VALUES ARE IN μF.

ELECTROLYTIC
CERAMIC
MYLER
NON POLAR

		NAME	SCHEMATIC DIAGRAM OF SYSCON			SCALE	MATERIAL	FINISH	
	GROUP NO.								
V12836	MODEL	APPROVED	CHECKED	DRAWN S. OHTSU	DESIGNED S. OHTSU	DRAWING NUMBER LPS10176			SHEET V
				DATE 98. 12. 10		GROUP		USER	

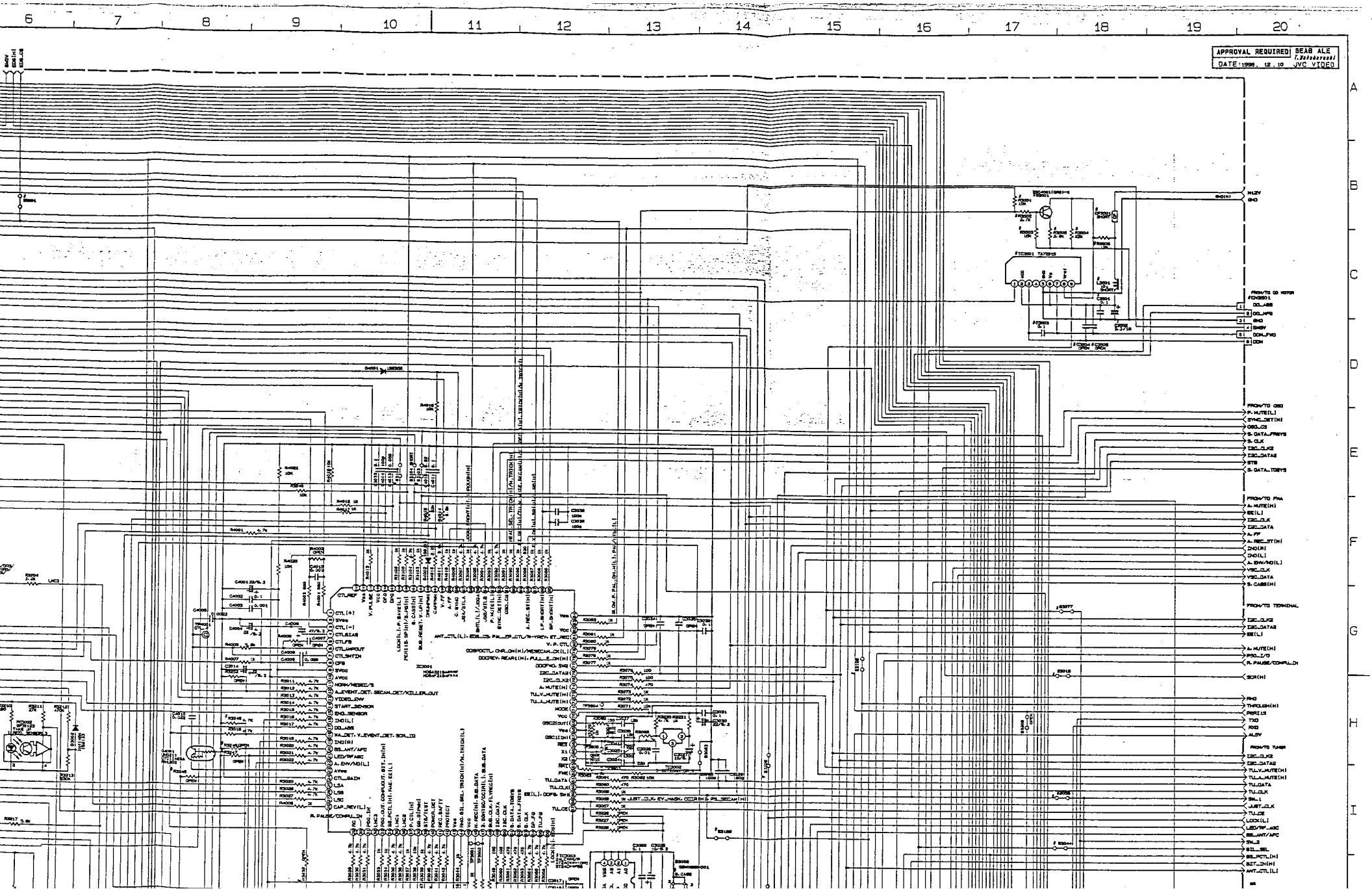
APPROVAL REQUIRED
SEAB ALE
DATE 1998. 12. 10
JVC VIDEO
FROM/TO DD MOTOR
FROM/TO OSD
FROM/TO FMA
FROM/TO TERMINAL
FROM/TO TUNER

USE OF OTHER DIV.

REVISIONS

03 TUNER[MAIN]

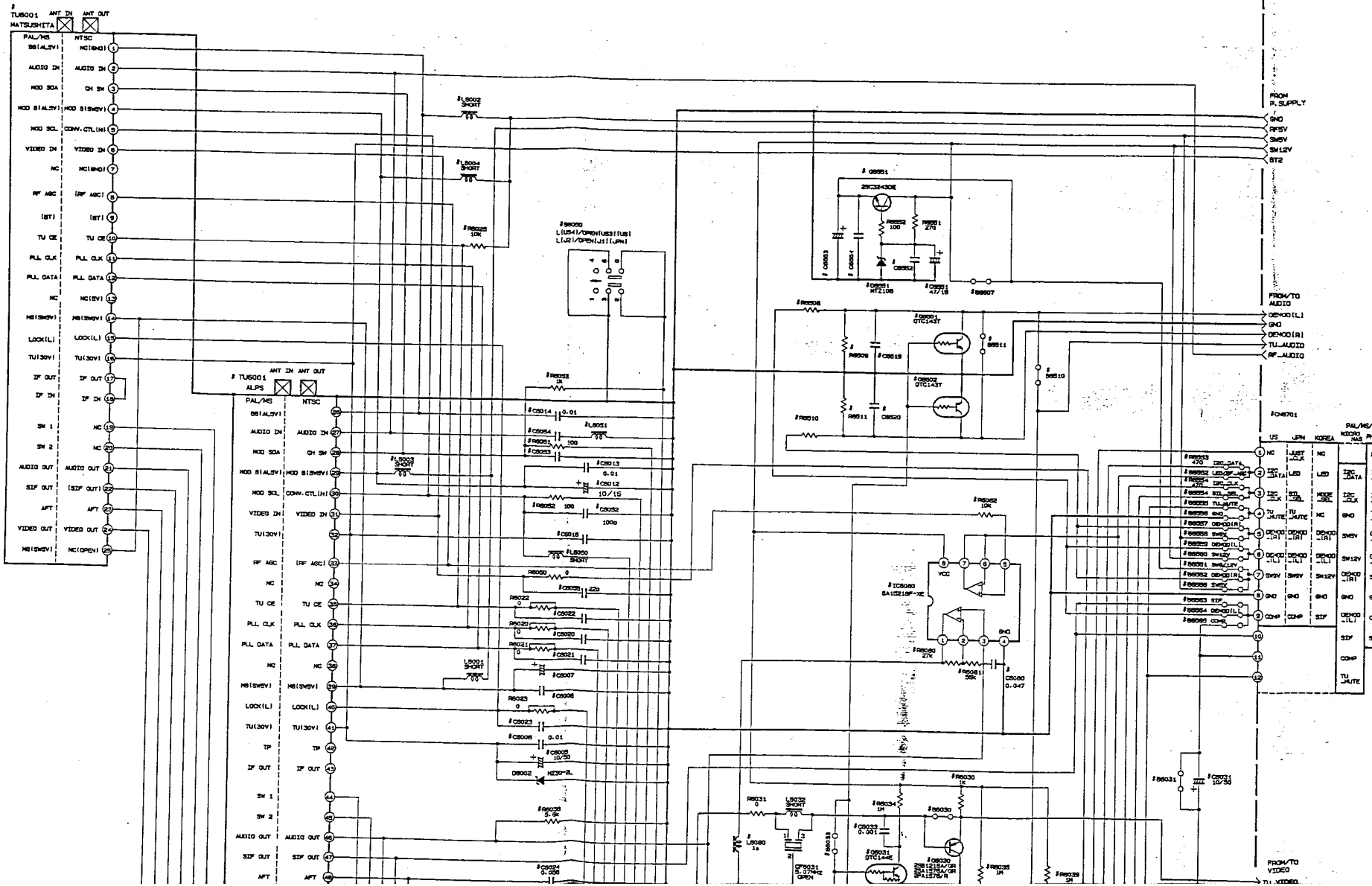
TU6001
MATSUSHITA
ANT IN
ANT OUT
PAL/MS
NTSC
AUDIO IN
MOD SDA
MOD SCL
VIDEO IN
RF AGC
TU CE
PLL CLK
PLL DATA
IF OUT
IF IN
SW 1
SW 2
AUDIO OUT
SIF OUT
AFT
TU6001
ALPS
FROM P.SUPPLY
GND
RF5V
SW5V
SW12V
ST2
FROM/TO AUDIO
DEMOD(L)
DEMOD(R)
TU_AUDIO
RF_AUDIO
FROM/TO VIDEO
TU_VIDEO
CN6701
US
JPN
KOREA
PAL/MS/ARC
NTSC/PAL
PHD_IN
2SC3243OE
DTC143T
DTC144E
IC6080
BA15218F-XE
VCC
GND
L6050
L(U54)/OPEN(US3)(US)
L(U2)/OPEN(J3)(JPN)
L6002
SHORT
L6004
SHORT
L6003
SHORT
L6001
SHORT
L6051
SHORT
L6060
SHORT
L6032
SHORT
L6080
1a
CF6031
5.07MHz
OPEN
D6002
HZ3V-2L
D6031
HZ7.10B
D6030
2SB1218A/QR
2SA1576A/QR
2SA1576/R
R6025
10K
R6026
5.6K
R6030
1K
R6031
0
R6033
R6034
1M
R6035
1M
R6039
1M
R6050
0
R6051
100
R6052
100
R6053
1K
R6060
27K
R6061
56K
R6062
10K
R6510
R6511
R6513
470
R6514
470
R6552
100
R6561
270
C6014
0.01
C6054
C6053
C6013
0.01
C6012
10/15
C6052
100a
C6016
C6055
220
C6022
C6020
C6021
C6007
C6008
C6023
C6006
0.01
C6009
10/50
C6024
0.056
C6033
0.001
C6031
10/50
C6080
0.047
C6511
C6519
C6520
C6551
C6552
C6553
C6554
C6555
C6556
C6557
C6558
C6559
C6560
C6561
C6562
C6563
C6564
C6565
C6566
C6567
C6568
C6569
C6570
C6571
C6572
C6573
C6574
C6575
C6576
C6577
C6578
C6579
C6580
C6581
C6582
C6583
C6584
C6585
C6586
C6587
C6588
C6589
C6590

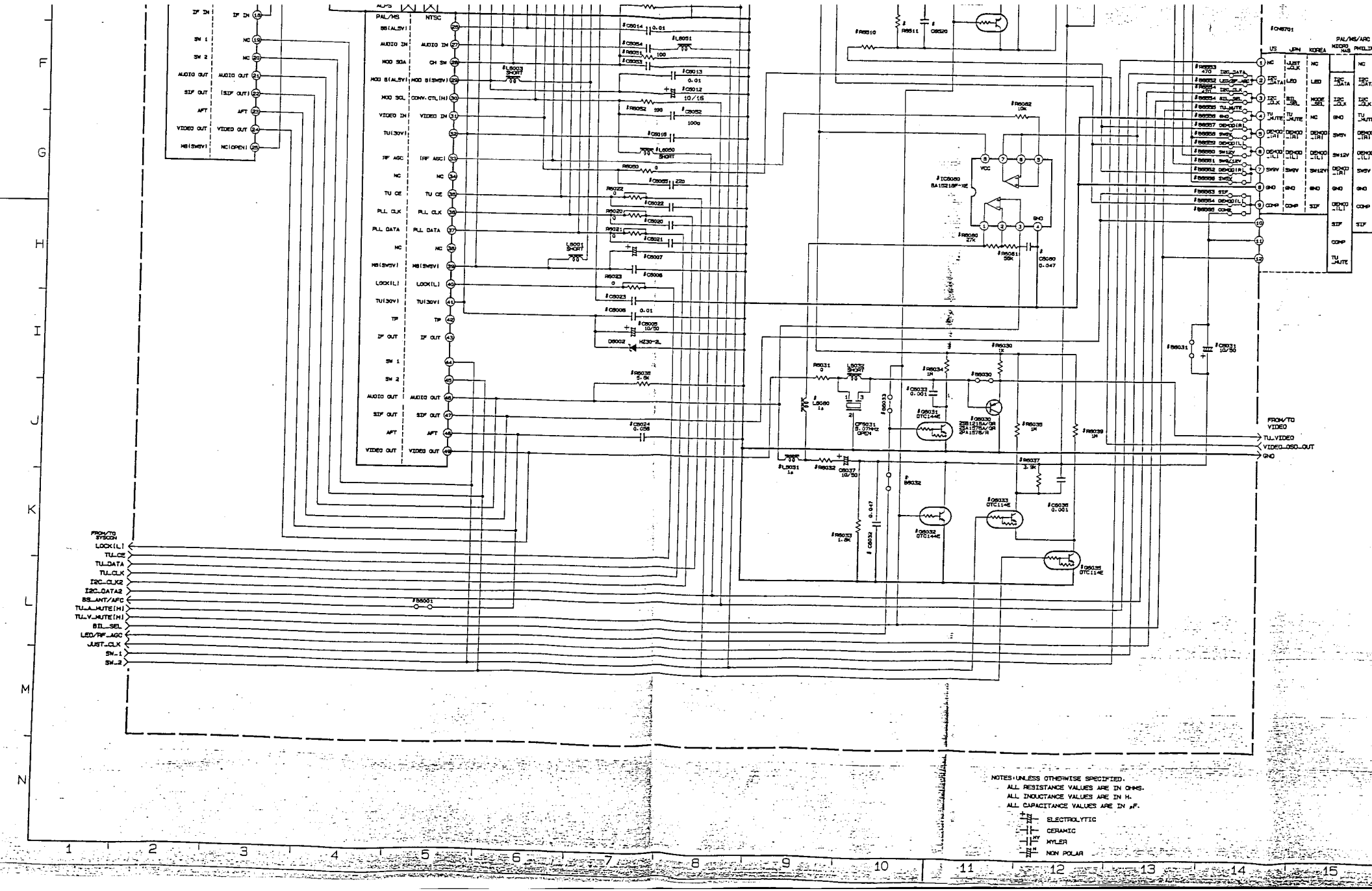
FROM/TO SYSCON
LOCK(L)
TU_CE
TU_DATA
TU_CLK
I2C_CLK2
I2C_DATA2
BS_ANT/AFC
TU_A_MUTE(H)
TU_V_MUTE(H)
BTL_SEL
LED/RF_AGC
JUST_CLK
SW_1
SW_2
FROM/TO VIDEO
TU_VIDEO
VIDEO_OSD_OUT
GND
PAL/MS
NTSC
IC5060
BA15218F-XE
VCC
GND
CN8701
US
JPN
KOREA
PAL/MS/ARC
NICAM
PHILIPS
NOTES: UNLESS OTHERWISE SPECIFIED.
ALL RESISTANCE VALUES ARE IN OHMS.
ALL INDUCTANCE VALUES ARE IN H.
ALL CAPACITANCE VALUES ARE IN μF.
ELECTROLYTIC
CERAMIC
MYLER
NON POLAR

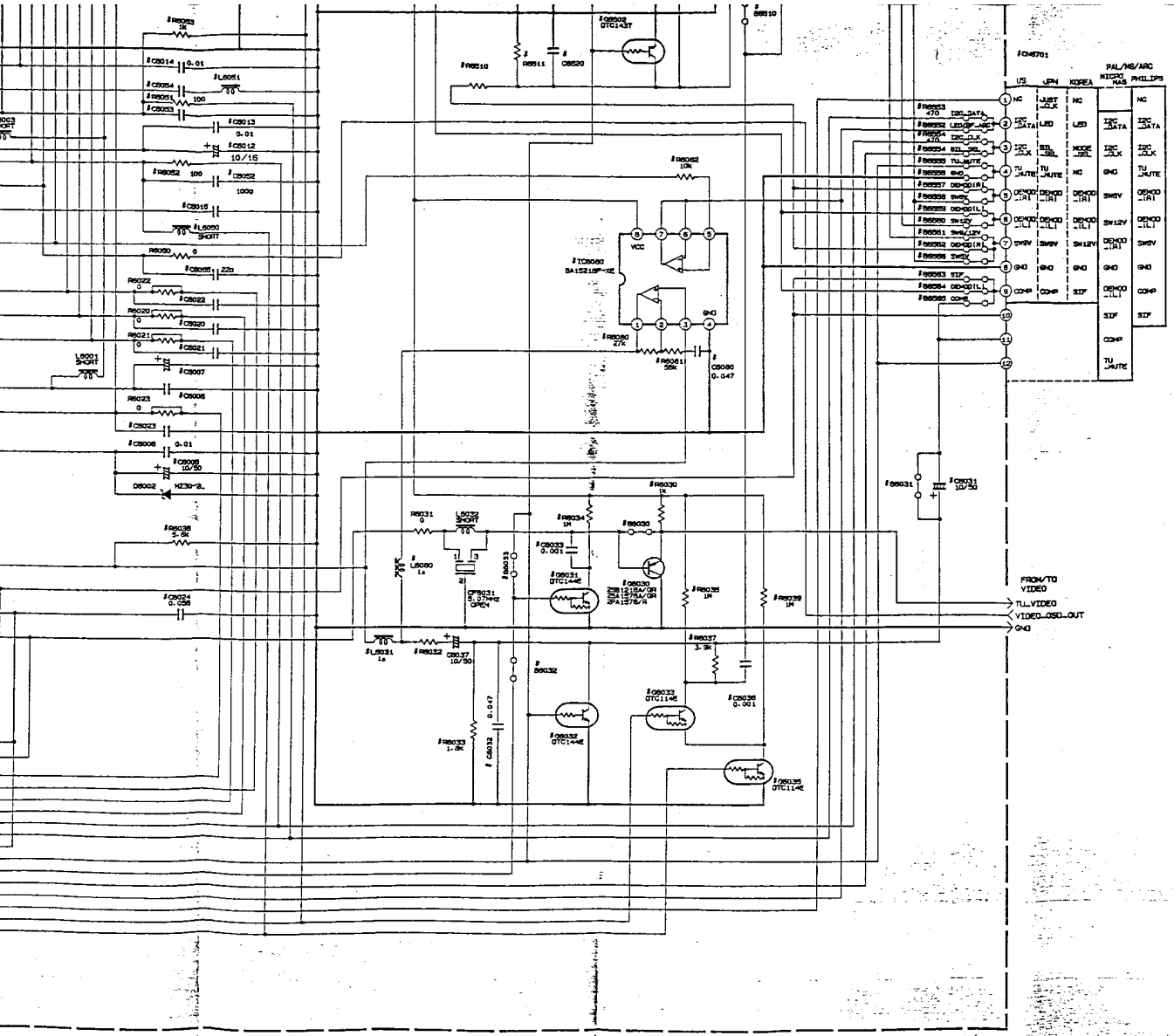

TU 30V	C5005	×	×	×	×	×	×	×	×	×	×	×
	C5006	×	×	×	×	×	×	○	○	○	○	○
MS(SWSV)	C5007	100μF/6.3V	100μF/6.3V	220μF/6.3V	220μF/6.3V	100μF/6.3V	×	×	×	×	×	×
	C5008	×	×	×	×	×	○	○	○	○	○	○
MOD 8(5V)	C5012-C5013	×	×	×	×	×	×	○	○	○	○	○
	L5003	○	○	○	○	○	×	×	×	×	×	×
	L5004	×	×	×	×	×	×	○	○	○	○	○
MOD 9(30V)	C5018	×	×	×	×	×	○	○	○	○	○	○
SB(ALSV)	C5014-L5002	×	×	×	×	×	○	○	○	○	○	○
PLL CLK	C5020	×	×	×	×	×	○	○	○	○	○	○
PLL DATA	C5021	×	×	×	×	×	○	○	○	○	○	○
TU CE	C5022	×	×	×	×	×	○	○	○	○	○	○
LOCK	C5023	×	×	×	×	×	○	○	○	○	○	○
MOD SDA /CH SW	R5050-R5053	○	○	○	○	○	×	×	×	×	×	×
	R5051	×	×	×	×	×	×	○	○	○	○	○
	C5053	×	×	×	×	×	×	×	×	×	×	×
MOD SCL /CONV.CTL	R5052	×	×	×	×	×	×	○	○	○	○	○
	C5052	×	×	×	×	×	×	×	×	×	×	×
	L5050	○	○	○	○	○	×	×	×	×	×	×

DEMOD	SYMBOL	NTSC			PAL/MS/ARC		
		US MTS	JAPAN MTS	KOREA MTS	NICAM/A2 MICRONAS	NICAM/A2 PHILIPS	MONO
DEMOD PWB ASS'Y	CN5701	PB11076*	PB11087*	PB11091*	LPA10021 -EEE	LPA10060 -EEE	–
5V REG	R5551-R5552 Q5551-Q5551	○	○	×	×	×	×
	Q5551-Q5554	×	×	×	×	×	×
SW12V	R5607	×	×	○	×	×	×
DEMOD OUT	R5508-R5510	0Ω	0Ω	6.8kΩ	0Ω	0Ω	×
	R5509-R5511	×	×	6.8kΩ	×	×	×
	C5519-C5520	×	5600pF	0.022μF	×	×	×
MUTE	Q5501-Q5502	×	×	×	×	×	×
TUNER MONO	R5510-R5511	×	×	×	×	×	○
DEMOD SELECTION	R5553-R5554	470Ω	×	×	0Ω	0Ω	×
	R5552-R5554	×	○	○	×	×	×
	R5555	○	○	○	○	○	×
	R5556	×	×	×	○	×	×
	R5557-R5559	○	○	○	×	○	×
	R5558-R5560	×	×	×	○	×	×
	R5561	○	○	○	×	×	×
	R5562-R5564	×	×	×	○	×	×
	R5563	×	×	○	×	×	×
	R5565	○	○	×	×	○	×
	R5566	×	×	×	×	○	×

JVC

MODE HR-S4600 U

DATE DEC. 21. 1998

SWITCH LOGIC

	FRANCE MS	NTSC		MULTI SYSTEM (MATSUSHITA)				MULTI SYSTEM (ALPS)			
		OPEN	L(0V)	BG	I	DK	M	BG	I	DK	M
SW1	SECAM_TL(OH)(L)	US3/J1	US4/J2	OPEN	OPEN	L(0V)	L(0V)	L(0V)	H(5V)	L(0V)	H(5V)
SW2	SECAM_VL(H)	CONV_ON	CONV_OFF	OPEN	L(0V)	OPEN	L(0V)	L(0V)	L(0V)	H(5V)	H(5V)

SYSTEM TABLE

	EU/EE/EA	EX/EX
SYSTEM	BG/DK	I

NOTES: UNLESS OTHERWISE SPECIFIED.
ALL RESISTANCE VALUES ARE IN OHMS.
ALL INDUCTANCE VALUES ARE IN H.
ALL CAPACITANCE VALUES ARE IN μF.

ELECTROLYTIC
CERAMIC
MYLER
NON POLAR

GROUP NO.	NAME: SCHEMATIC DIAGRAM OF TUNER				SCALE	MATERIAL	FINISH
V12 BUILD UP	MODEL	APPROVED	CHECKED	DRAWN T. OHTANI	DESIGNED T. USHIAMA	DRAWING NUMBER LPS10178	SHEET ✓
				DATE 1998.12.14		GROUP	USER

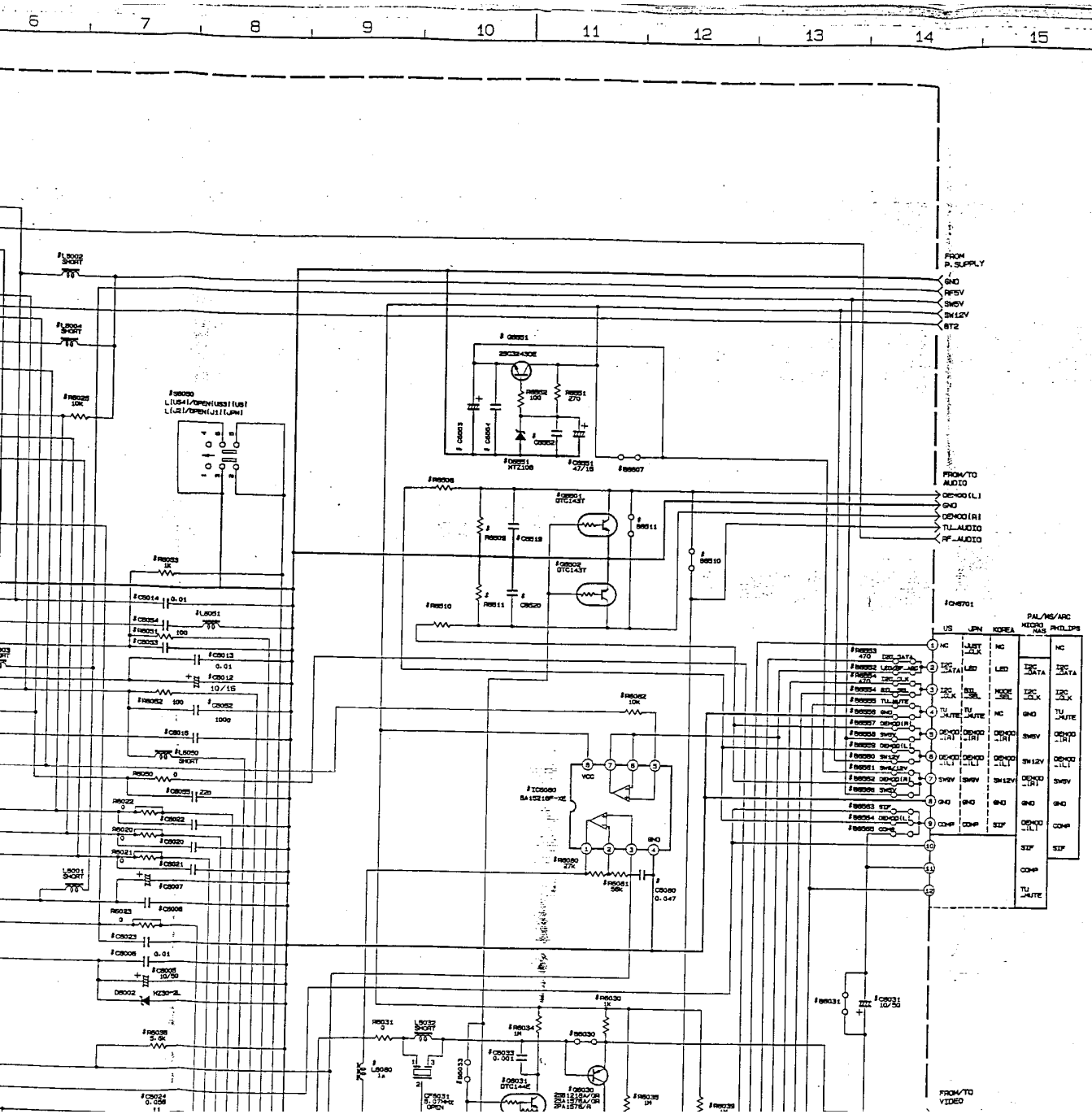

APPROVAL REQUIRED | BEAB ALE
DATE: 1998. 12. 17 | JVC VIDEO

DIFFERENCE TABLE

TUNER	SYMBOL	US/UM/ PAL-M/PAL-N		JAPAN		KOREA (K2)	FRANCE MS	EU/EK	ARC			
									3SYSTEM/EE/EA		4SYSTEM	
		MATSU SHITA	ALPS	MATSU SHITA	ALPS		ALPS	MATSU SHITA	MATSUSHITA		MATSUSHITA	
									H1F1	MONO	H1F1	MONO
TUNER UNIT	TU5001	GAU0112	GAU0115	GAU0112	GAU0114	GAU0125	GAU0109	GAU0107	GAU0107	GAU0107	GAU0110	GAU0110
	R6025	×	×	×	○	×	×	×	×	×	×	×
AT3+	IC5060-R6062	×	×	×	×	×	○	○	×	×	×	×
CHP	R6060-R6061 C5060-L5060	×	×	×	×	×	×	×	×	×	×	×
VIDEO BUFFER	R5030-S6030	○	○	○	○	○	○	○	○	○	○	○
	S6030	×	×	×	×	×	×	×	×	×	×	×
TU_V_MUTE	Q6031	×	×	×	×	×	○	○	○	○	○	○
	R6034-C6033-S6032	×	×	×	×	×	×	×	×	×	×	×
TU_A_MUTE	Q6032	×	×	×	×	×	×	×	×	×	×	×
SYSTEM M AUDIO EMPHASIS	R6035-R6037-R6039-C6036-Q6033-Q6035	×	×	×	×	×	×	×	×	×	×	×
AUDIO OUT	L6031	SHORT	SHORT	SHORT	SHORT	×	1μH	1μH	SHORT	SHORT	SHORT	SHORT
	R6032	12kΩ	12kΩ	0Ω	0Ω	×	3.3kΩ	3.3kΩ	3.3kΩ	3.3kΩ	3.3kΩ	3.3kΩ
	R6033	×	×	×	×	×	1.5kΩ	1.8kΩ	1.8kΩ	1.8kΩ	1.8kΩ	1.8kΩ
	C6032	×	×	×	×	×	×	×	×	○	×	○
	C6031	×	×	×	×	×	×	×	×	×	×	×
	S6031	○	○	○	○	×	○	○	○	○	○	○
	C6037	○	○	○	○	×	○	○	○	○	○	○
AFC	S6001	○	○	×	×	○	○	○	○	○	○	○
	C6024	○	○	×	×	○	×	×	×	×	×	×
CENELEC	C6054	×	×	×	×	○	×	×	×	×	×	×
	L5051	×	×	×	×	SHORT	×	×	×	×	×	×
TU 30V	C5005	×	×	×	×	×	×	×	×	×	×	×
	C5006	×	×	×	×	×	○	○	○	○	○	○
MS(5V5V)	C5007	100μF/6.3V	100μF/6.3V	200μF/6.3V	200μF/6.3V	100μF/6.3V	×	×	×	×	×	×
	C5008	×	×	×	×	×	○	○	○	○	○	○
MOD 8(5V)	C5012-C5013	×	×	×	×	×	○	○	○	○	○	○
	L5003	○	○	○	○	○	×	×	×	×	×	×
	L5004	×	×	×	×	×	×	○	○	○	○	○
MOD 8(30V)	C5016	×	×	×	×	×	○	○	○	○	○	○
8B(ALS5V)	C5014-L5002	×	×	×	×	×	○	○	○	○	○	○
PLL CLK	C5020	×	×	×	×	×	×	○	○	○	○	○
PLL DATA	C5021	×	×	×	×	×	×	○	○	○	○	○
TU CE	C5022	×	×	×	×	×	×	○	○	○	○	○
LOCK	C5023	×	×	×	×	×	×	○	○	○	○	○
MOD SDA /CH SW	S5050-R5053	○	○	○	○	○	×	×	×	×	×	×
	R5051	×	×	×	×	×	×	○	○	○	○	○
	C5053	×	×	×	×	×	×	×	×	×	×	×
MOD SCL /CONV. CTL	R5052	×	×	×	×	×	×	○	○	○	○	○
	C5052	×	×	×	×	×	×	×	×	×	×	×
	L5050	○	○	○	○	○	×	×	×	×	×	×

DEMOD	SYMBOL	NTSC			PAL/MS/ARC		
		US MTS	JAPAN MTS	KOREA MTS	NICAM/A2		MONO
					MICRONAS	PHILIPS	
DEMOD PWB ASS'Y	CN6701	PB11076#	PB11067#	PB11091#	LPA10021 -###	LPA10060 -###	—
5V REG	R6551-R6552 Q6551-C6551	○	○	×	×	×	×
	C6551-C6554	×	×	×	×	×	×
SW12V	S6607	×	×	○	×	×	×
DEMOD OUT	R6508-R6510	0Ω	0Ω	6.8kΩ	0Ω	0Ω	×
	R6509-R6511	×	×	6.8kΩ	×	×	×
	C6519-C6520	×	5600pF	0.022μF	×	×	×
MUTE	Q6501-Q6502	×	×	×	×	×	×

USE OF OTHER DIV.

REVISIONS

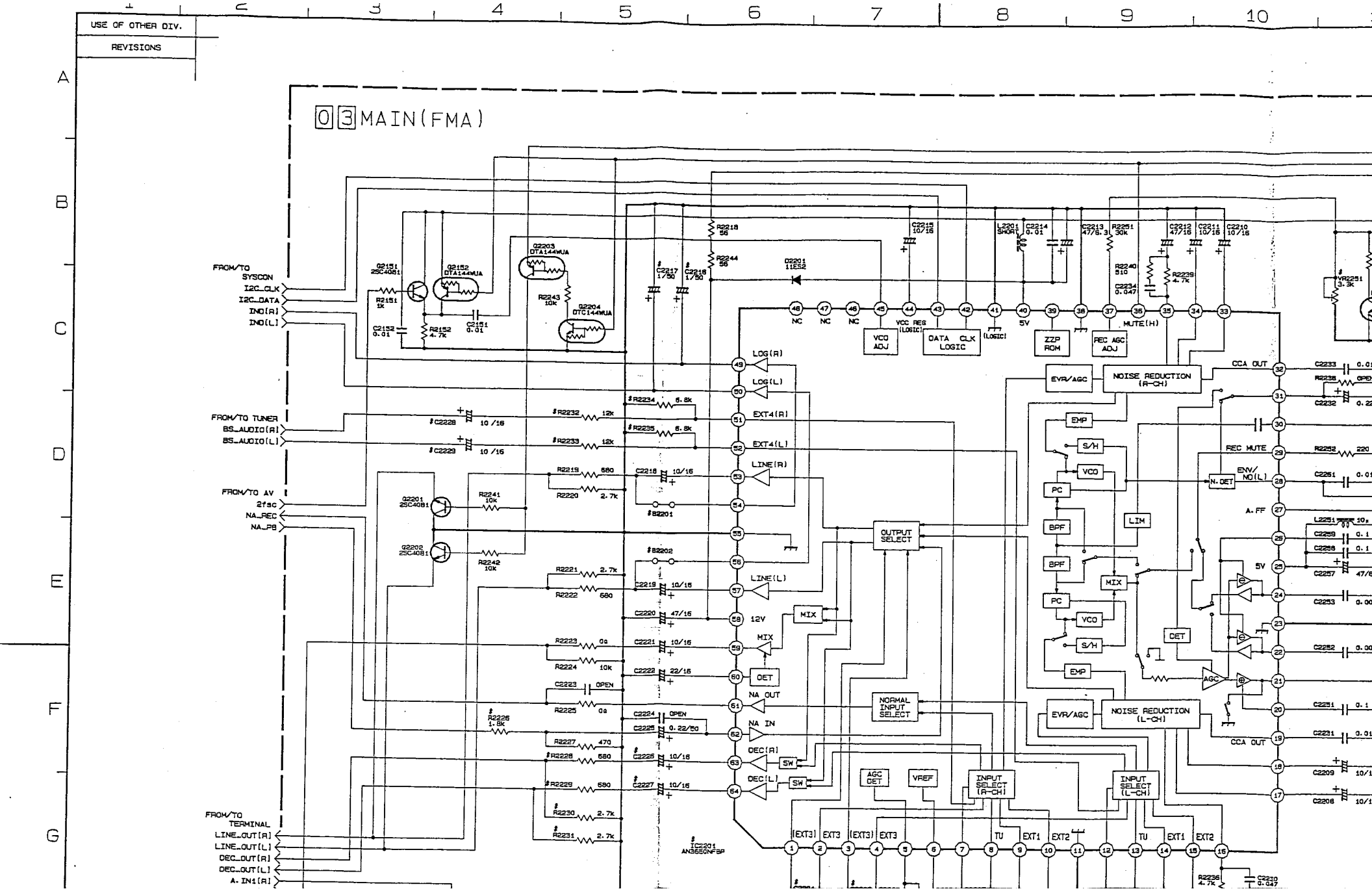

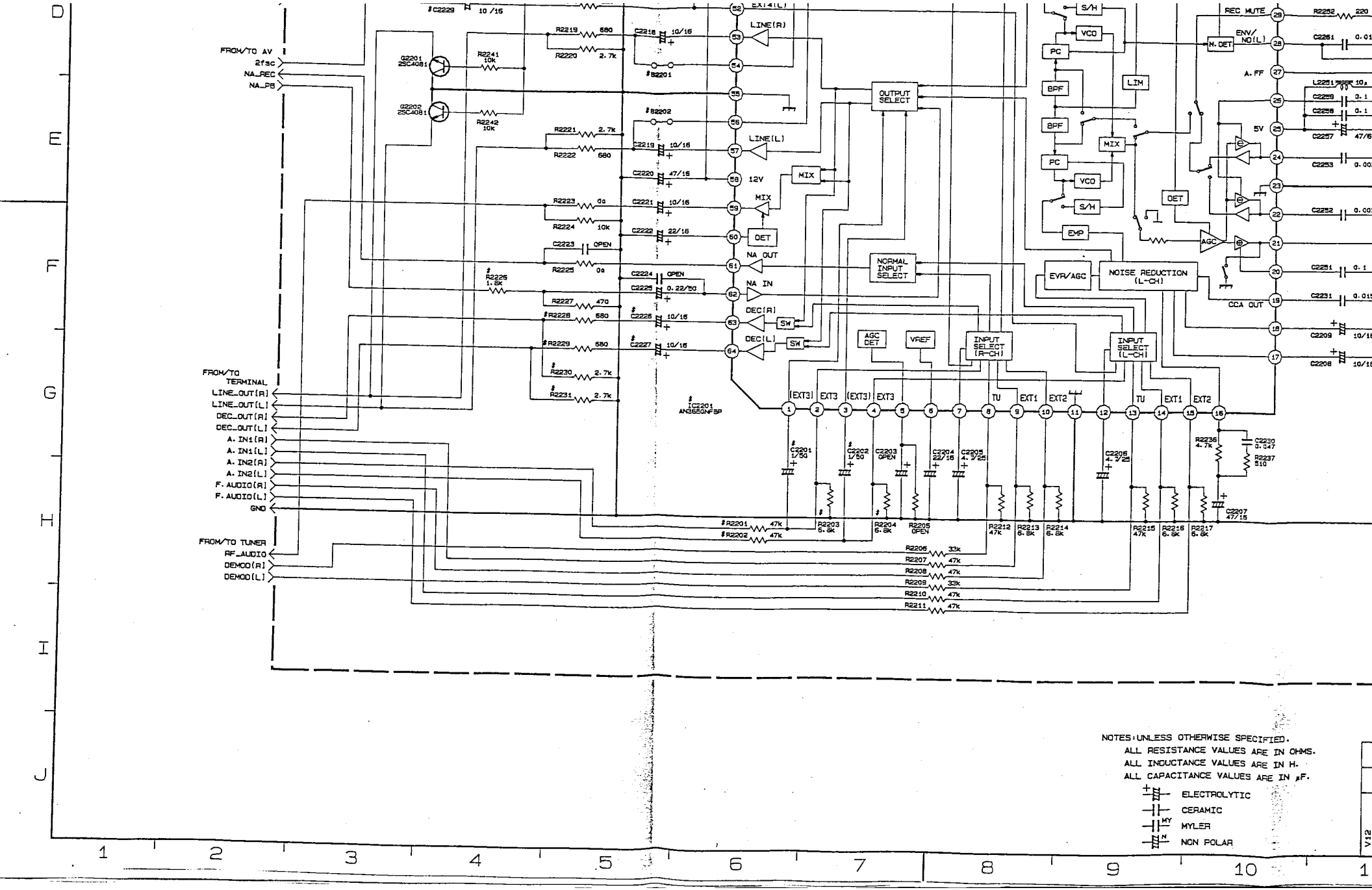

NOTES: UNLESS OTHERWISE SPECIFIED.
ALL RESISTANCE VALUES ARE IN OHMS.
ALL INDUCTANCE VALUES ARE IN H.
ALL CAPACITANCE VALUES ARE IN μF.

ELECTROLYTIC
CERAMIC
MYLER
NON POLAR

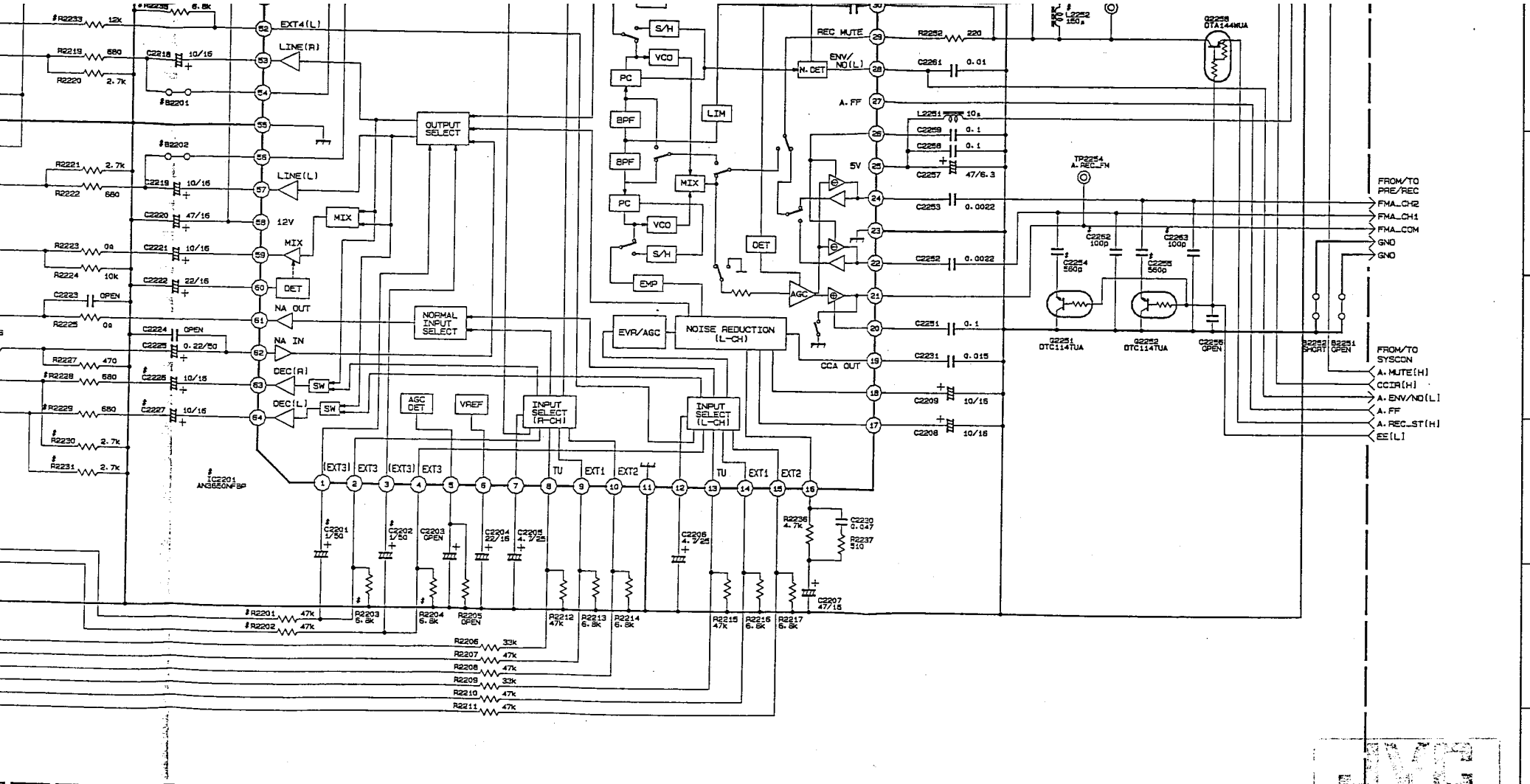

NOTES: UNLESS OTHERWISE SPECIFIED.
ALL RESISTANCE VALUES ARE IN OHMS.
ALL INDUCTANCE VALUES ARE IN H.
ALL CAPACITANCE VALUES ARE IN μF.

ELECTROLYTIC
CERAMIC
MYLER
NON POLAR

MODEL HR-S46004
DATE DEC. 21. 1998

GROUP NO.	NAME: SCHEMATIC DIAGRAM OF FMA			SCALE	MATERIAL	FINISH
V12 BUILD UP / MODEL	APPROVED	CHECKED	DRAWN: K. FUJINO	DESIGNED: K. FUJINO	DRAWING NUMBER: LPS20116	SHEET 1
			DATE 98.07.07		GROUP / USER	

APPROVAL REQUIRED | BEAB ALE T.Wakaberashi
DATE: 98.12.18 JVC VIDEO

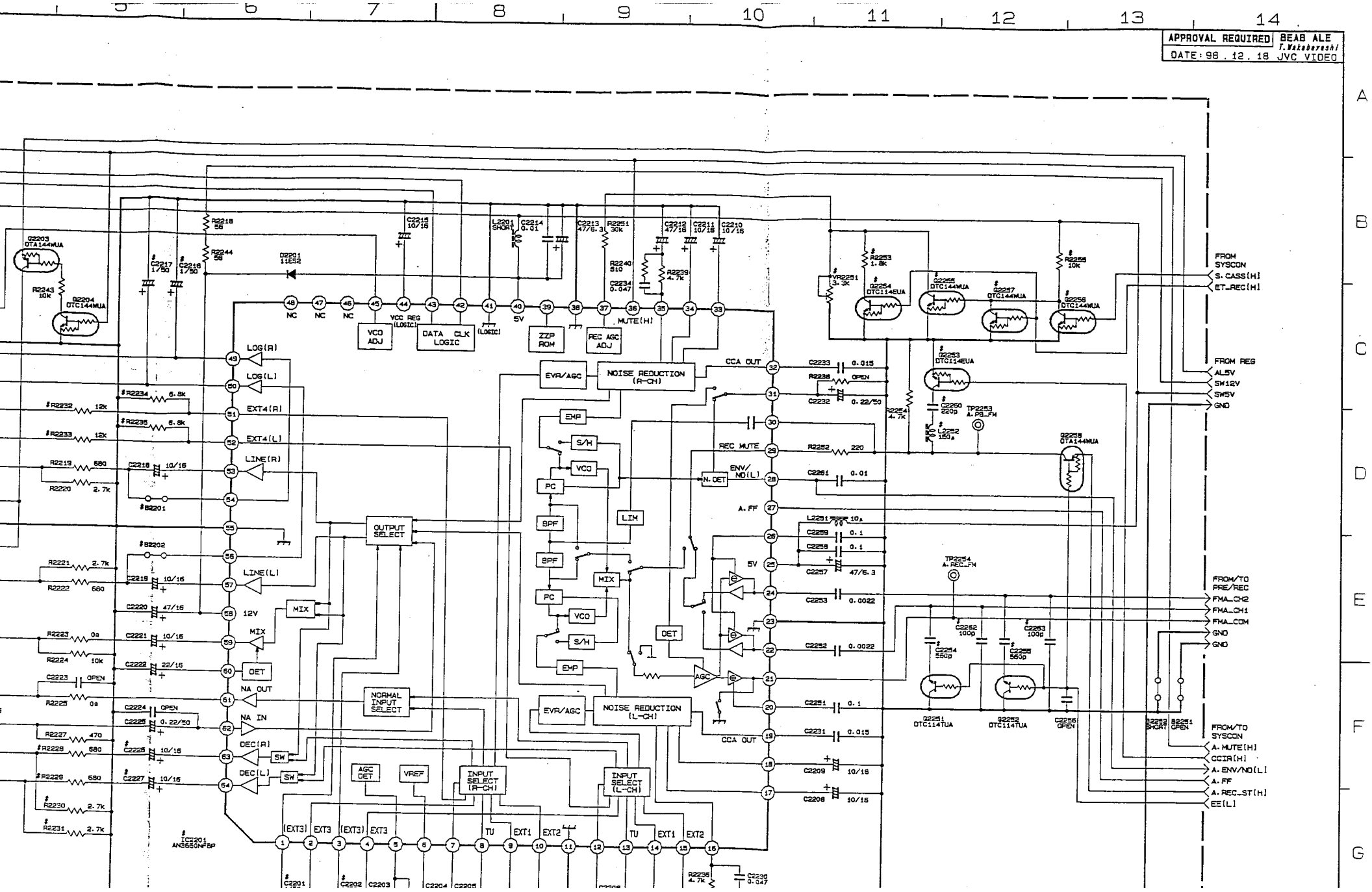

USE OF OTHER DIV.

REVISIONS

28 SW/DISPLAY (SW/DISPLAY)

400D:100540

98-12-16

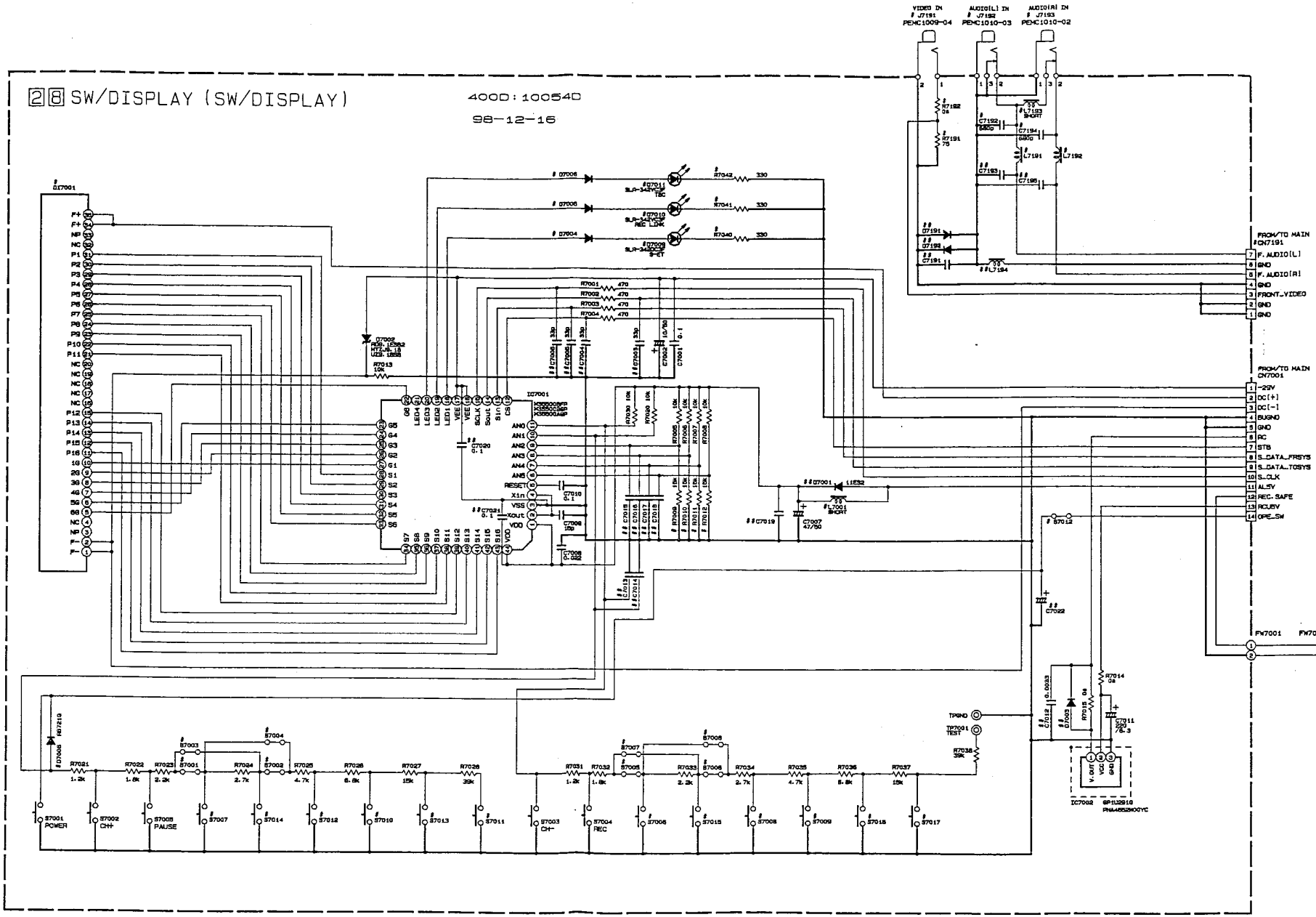

F.PANEL	S7006	S7007	S7008	S7009	S7010	S7011	S7012	S7013	S7014	S7015	S7016	S7017	D7004 R7040	D7009	D7005 R7041	D7010	D7006 R7042	D7011	S7001 S7002	S7003 S7004	S7005 S7006	S7007 S7008	D7008	S7012

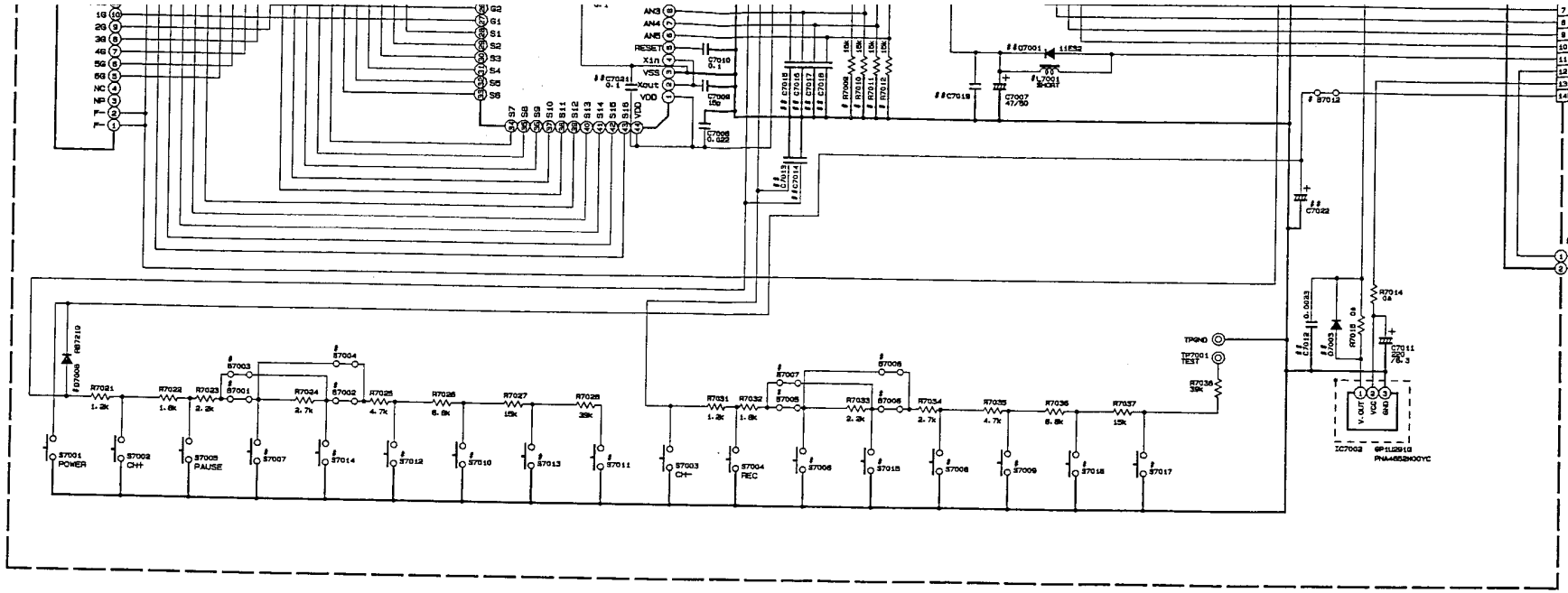

F.PANEL		S7008	S7007	S7006	S7009	S7010	S7011	S7012	S7013	S7014	S7015	S7016	S7017	D7004 R7040	D7009	D7005 R7041	D7010	D7006 R7042	D7011	S7001 S7002	S7003 S7004	S7005 S7006	S7007 S7005	D7008	S7012
4000M	S1D	PLAY	STOP	FF	REW	REVIEW	TIMER	S-ET	RECLINK	SP/EP	EJECT	P.JOG-	P.JOG+	YES	YES	YES	SLR-342MC3F	YES	REVIEW	YES	NO	YES	NO	YES	YES
	S5D	PLAY	STOP	FF	REW	REVIEW	TIMER	S-ET	RECLINK	SP/EP	EJECT	P.JOG-	P.JOG+	YES	YES	YES	SLR-342MC3F	YES	REVIEW	YES	NO	YES	NO	YES	YES
	S5DD	PLAY	STOP	FF	REW	TBC	TIMER	S-ET	RECLINK	SP/EP	EJECT	P.JOG-	P.JOG+	YES	YES	YES	SLR-342MC3F	YES	TBC	YES	NO	YES	NO	YES	YES
	D2FU	PLAY	ST/EJ	FF	REW	MENU	OK	REVIEW	RECLINK	SP/EP	DISPLAY	INSERT	A.DUB	NO	NO	YES	SLR-342VC3F	NO	NO	YES	NO	YES	NO	SHORT	NO
	S1EU	PLAY	ST/EJ	FF	REW	TIMER	REVIEW	S-ET	RECLINK	SP/LP	DISPLAY	P.JOG-	P.JOG+	YES	YES	YES	SLR-342VC3F	NO	NO	YES	NO	YES	NO	SHORT	NO
	S1EK	PLAY	ST/EJ	FF	REW	TIMER	REVIEW	S-ET	RECLINK	SP/LP	DISPLAY	P.JOG-	P.JOG+	YES	YES	YES	SLR-342VC3F	NO	NO	YES	NO	YES	NO	SHORT	NO
	S1MS	PLAY	ST/EJ	FF	REW	TIMER	REVIEW	S-ET	RECLINK	SP/LP	DISPLAY	P.JOG-	P.JOG+	YES	YES	YES	SLR-342VC3F	NO	NO	YES	NO	YES	NO	SHORT	NO
4000J	D2U	NO	NO	NO	NO	MENU	OK	REVIEW	RECLINK	ST/EJ	PLAY	INSERT	A.DUB	NO	NO	YES	SLR-342VC3F	NO	NO	NO	YES	NO	YES	SHORT	NO
	S1U S1K	NO	NO	NO	NO	MENU	OK	S-ET	RECLINK	ST/EJ	PLAY	SP/EP	TV/VCR	YES	YES	YES	SLR-342VC3F	NO	NO	NO	YES	NO	YES	SHORT	NO
	S15U	NO	NO	NO	NO	MENU	OK	S-ET	RECLINK	ST/EJ	PLAY	INSERT	A.DUB	YES	YES	YES	SLR-342VC3F	NO	NO	NO	YES	NO	YES	SHORT	NO
	D2EU D2EK	NO	NO	NO	NO	TIMER	REVIEW	SMOO EDIT	RECLINK	ST/EJ	PLAY	INSERT	A.DUB	NO	NO	YES	SLR-342VC3F	NO	NO	NO	YES	NO	YES	SHORT	NO
	D2MS	NO	NO	NO	NO	TIMER	REVIEW	SMOO EDIT	RECLINK	ST/EJ	PLAY	INSERT	A.DUB	NO	NO	YES	SLR-342VC3F	NO	NO	NO	YES	NO	YES	SHORT	NO
	S2EU S2EK	NO	NO	NO	NO	TBC	REVIEW	S-ET	RECLINK	ST/EJ	PLAY	SP/LP	DISPLAY	YES	YES	YES	SLR-342VC3F	YES	TBC	NO	YES	NO	YES	SHORT	NO
	S2MS	NO	NO	NO	NO	TBC	REVIEW	S-ET	RECLINK	ST/EJ	PLAY	SP/LP	A.DUB	YES	YES	YES	SLR-342VC3F	YES	TBC	NO	YES	NO	YES	SHORT	NO

S-JACK

S1U S1K S1EU S1EK D2U D2EU D2E	
THE OTHERS	

AV IN

S1EU S1EX	
S1U S1K S1 S1D S5D S5	
D2EU D2EK S2EU S2EK	

FOP

S1U S1K S1EU S1EK D2U	
THE OTHERS	

	OPTION	R7009	R7010	R7
S1EX S1EU S1MS S5DD S1K	S1D S1U	NO	NO	
S2EX S2EU S2MS	S5D S15U	39k	NO	
D2EKD2EU D2MS	D2U	NO	39k	
		NO	NO	3
		NO	NO	
		39k	39k	
		39k	NO	3
		39k	NO	
		NO	39k	3
		NO	39k	
		NO	NO	3

##:NOT USED

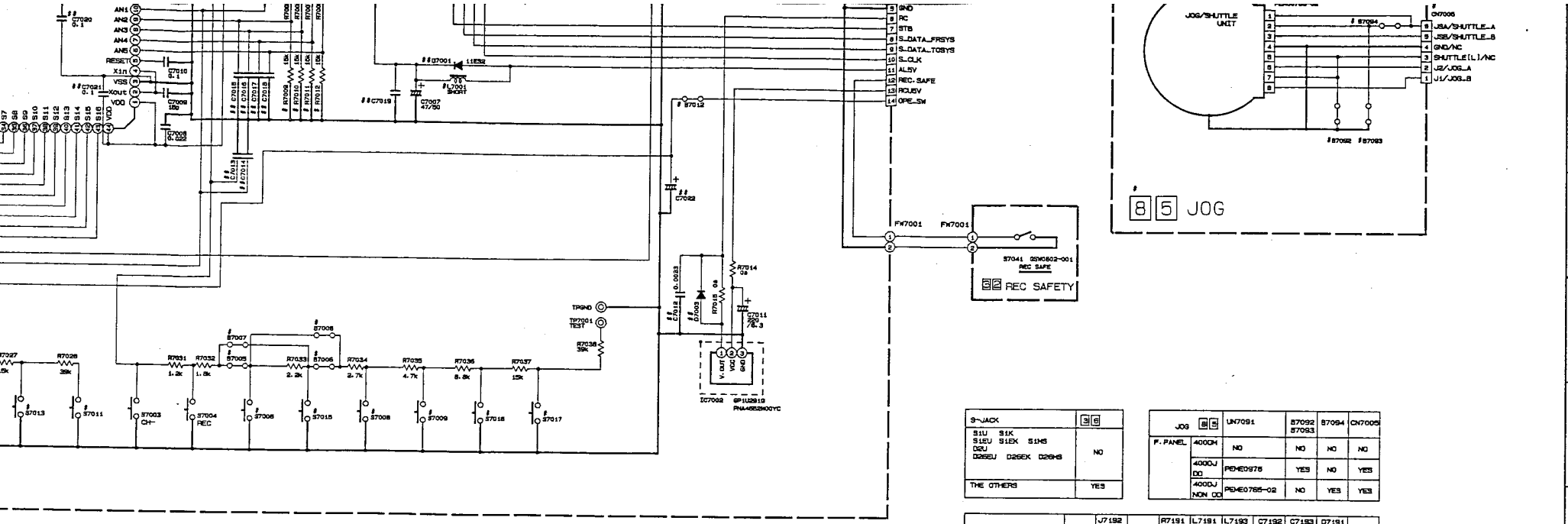

S-JACK	36
S1U S1K S1EU S1EK S1HS D2U D26EU D26EK D26HS	NO
THE OTHERS	YES

JOG 85		UN7091	S7092 S7093	S7094	CN7005
F.PANEL	400DM	NO	NO	NO	NO
	400DJ DO	PEME0976	YES	NO	YES
	400DJ NON DO	PEME0765-02	NO	YES	YES

AV IN	J7191	J7192 J7193	CN7191	R7191 R7192	L7191 L7192	L7193 L7194	C7192 C7194	C7193 C7195	D7191 D7192	C7191
S1EU S1EK S1HS	NO	NO	NO	NO	NO	NO	NO	NO	NO	NO
S1U S1K S15U D2U S1D S5D S55D	YES	YES	3-7	YES	SHORT	SHORT	NO	NO	NO	NO
D26EU D26EK D26HS S2EU S2EK S2HS	YES	YES	3-7	YES	100Ω	SHORT	YES	NO	NO	NO

FDP	DI7001
S1U S1K S15U S1EU S1EK S1HS D2U	QLF0031 QLF0033
THE OTHERS	QLF0032 QLF0034

	OPTION	R7009	R7010	R7011	R7012
S1EK S1EU S1HS S5SD S1K	S1D S1U	NO	NO	NO	NO
S2EK S2EU S2HS	S5D S15U	39k	NO	NO	NO
D26EK D26EU D26HS	D2U	NO	39k	NO	NO
		NO	NO	39k	NO
		NO	NO	NO	39k
		39k	39k	NO	NO
		39k	NO	39k	NO
		39k	NO	NO	39k
		NO	39k	39k	NO
		NO	39k	NO	39k
		NO	NO	39k	39k

#:NOT USED

	S7013	S7014	S7015	S7016	S7017	D7004 R7040	D7009	D7005 R7041	D7010	D7006 R7042	D7011	S7001 S7002	S7003 S7004	S7005 S7006	S7007 S7008	D7008	S7012
	ECLINK	SP/EP	EJECT	P.JOG-	P.JOG+	YES	YES	YES	SLR-342MC3F	YES	REVIEW	YES	NO	YES	NO	YES	YES
	ECLINK	SP/EP	EJECT	P.JOG-	P.JOG+	YES	YES	YES	SLR-342MC3F	YES	REVIEW	YES	NO	YES	NO	YES	YES
	ECLINK	SP/EP	EJECT	P.JOG-	P.JOG+	YES	YES	YES	SLR-342MC3F	YES	TBC	YES	NO	YES	NO	YES	YES
	ECLINK	SP/EP	DISPLAY	INSERT	A.DUB	NO	NO	YES	SLR-342VC3F	NO	NO	YES	NO	YES	NO	SHORT	NO
	ECLINK	SP/LP	DISPLAY	P.JOG-	P.JOG+	YES	YES	YES	SLR-342VC3F	NO	NO	YES	NO	YES	NO	SHORT	NO
	ECLINK	SP/LP	DISPLAY	P.JOG-	P.JOG+	YES	YES	YES	SLR-342VC3F	NO	NO	YES	NO	YES	NO	SHORT	NO
	ECLINK	SP/LP	DISPLAY	P.JOG-	P.JOG+	YES	YES	YES	SLR-342VC3F	NO	NO	YES	NO	YES	NO	SHORT	NO
	ECLINK	ST/EJ	PLAY	INSERT	A.DUB	NO	NO	YES	SLR-342VC3F	NO	NO	NO	YES	NO	YES	SHORT	NO
	ECLINK	ST/EJ	PLAY	SP/EP	TV/VCR	YES	YES	YES	SLR-342VC3F	NO	NO	NO	YES	NO	YES	SHORT	NO
	ECLINK	ST/EJ	PLAY	INSERT	A.DUB	YES	YES	YES	SLR-342VC3F	NO	NO	NO	YES	NO	YES	SHORT	NO
	ECLINK	ST/EJ	PLAY	INSERT	A.DUB	NO	NO	YES	SLR-342VC3F	NO	NO	NO	YES	NO	YES	SHORT	NO
	ECLINK	ST/EJ	PLAY	INSERT	A.DUB	NO	NO	YES	SLR-342VC3F	NO	NO	NO	YES	NO	YES	SHORT	NO
	ECLINK	ST/EJ	PLAY	SP/LP	DISPLAY	YES	YES	YES	SLR-342VC3F	YES	TBC	NO	YES	NO	YES	SHORT	NO
	ECLINK	ST/EJ	PLAY	SP/LP	A.DUB	YES	YES	YES	SLR-342VC3F	YES	TBC	NO	YES	NO	YES	SHORT	NO

JVC

MODEL HR-S4600U

DATE DEC. 21. 1998

NOTES: UNLESS OTHERWISE SPECIFIED.
ALL RESISTANCE VALUES ARE IN OHMS.
ALL INDUCTANCE VALUES ARE IN H.
ALL CAPACITANCE VALUES ARE IN μF.

ELECTROLYTIC
CERAMIC
MYLER
NON POLAR

ALL DIODES ARE 1SS133 OR 1N4148M.

GROUP NO.	NAME: SCHEMATIC DIAGRAM OF FRONT	SCALE	MATERIAL	FINISH	
MODEL: V1255 (JVC4000)	APPROVED / CHECKED / DRAWN: K. TAKEUCHI / DESIGNED: K. TAKEUCHI	DRAWING NUMBER: LPS10181		SHEET: 1	
	DATE 98-12-18	GROUP		USER	

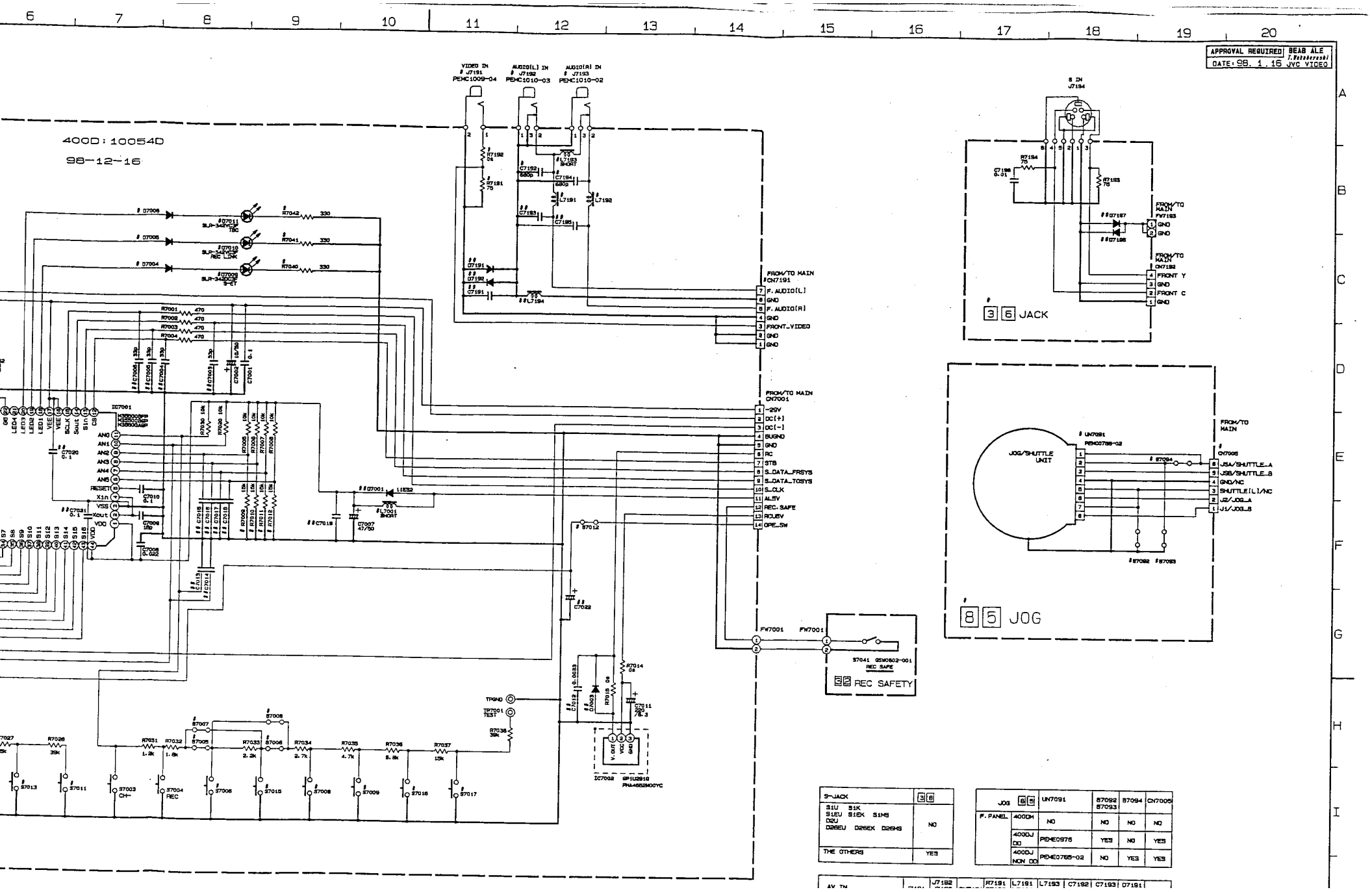

S-JACK	3 6
S1U S1K S1EU S1EK S1MS D2U D2EU D2EK D2MS	NO
THE OTHERS	YES

JOG 8 5		UN7091	S7092 S7093	S7094	CN7006
F. PANEL	400DM	NO	NO	NO	NO
	400DJ DO	PEMC0976	YES	NO	YES
	400DJ NON DO	PEMC0765-02	NO	YES	YES

AV IN		J7192		R7191	L7191	L7193	C7192	C7193	D7191

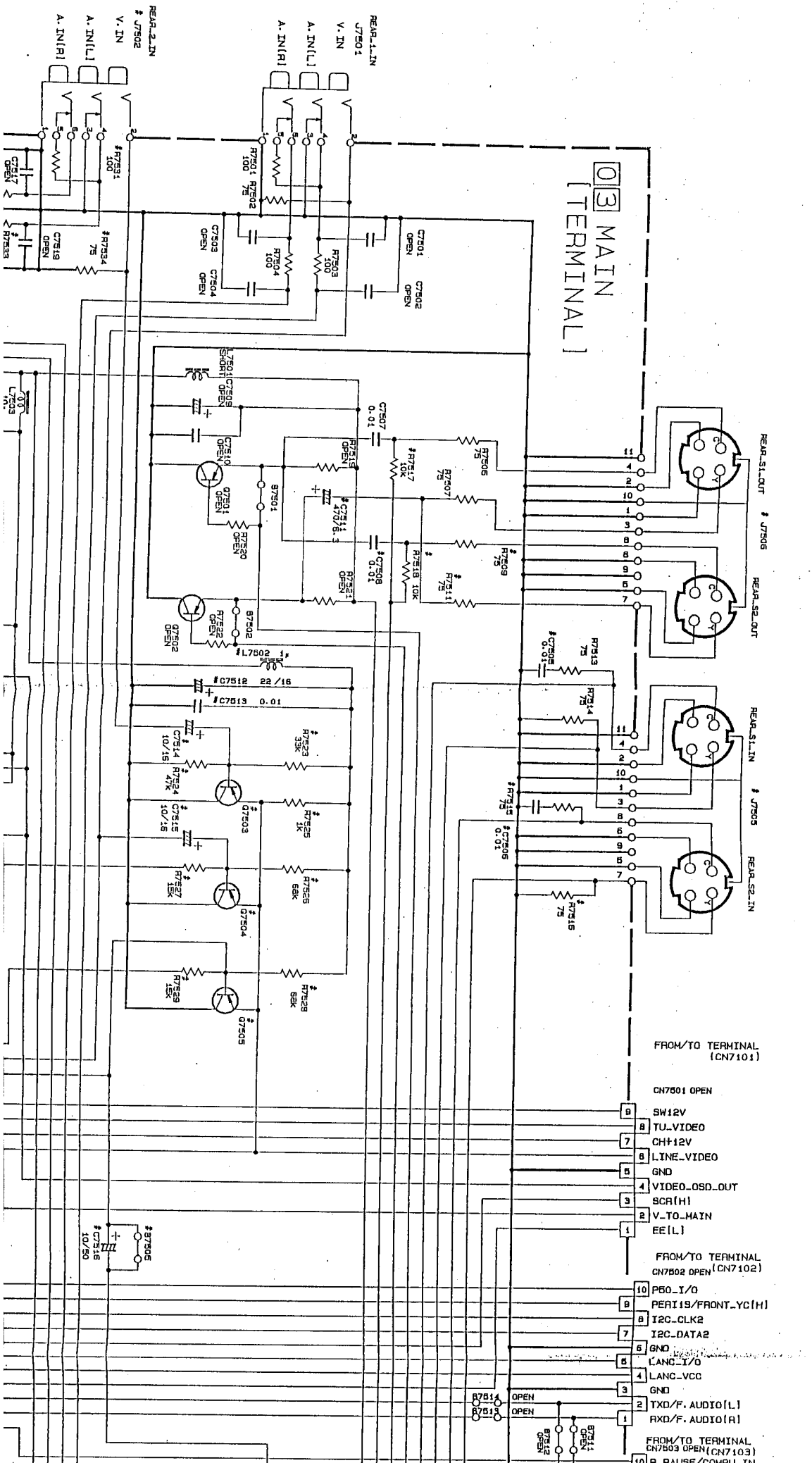
03 MAIN [TERMINAL]
REAR_2_IN # J7502
A. IN(R)
A. IN(L)
V. IN
REAR_1_IN J7501
A. IN(R)
A. IN(L)
V. IN
REAR_S1_OUT # J7506
REAR_S2_OUT
REAR_S1_IN # J7505
REAR_S2_IN
FROM/TO TERMINAL (CN7101)
CN7501 OPEN
SW12V
TU_VIDEO
CH+12V
LINE_VIDEO
GND
VIDEO_OSD_OUT
SCR(H)
V_TO_MAIN
EE(L)
FROM/TO TERMINAL (CN7102)
CN7502 OPEN
P50_I/O
PERI19/FRONT_YC(H)
I2C_CLK2
I2C_DATA2
GND
LANC_I/O
LANC_VCC
GND
TXD/F. AUDIO(L)
RXD/F. AUDIO(R)
FROM/TO TERMINAL (CN7103)
CN7503 OPEN

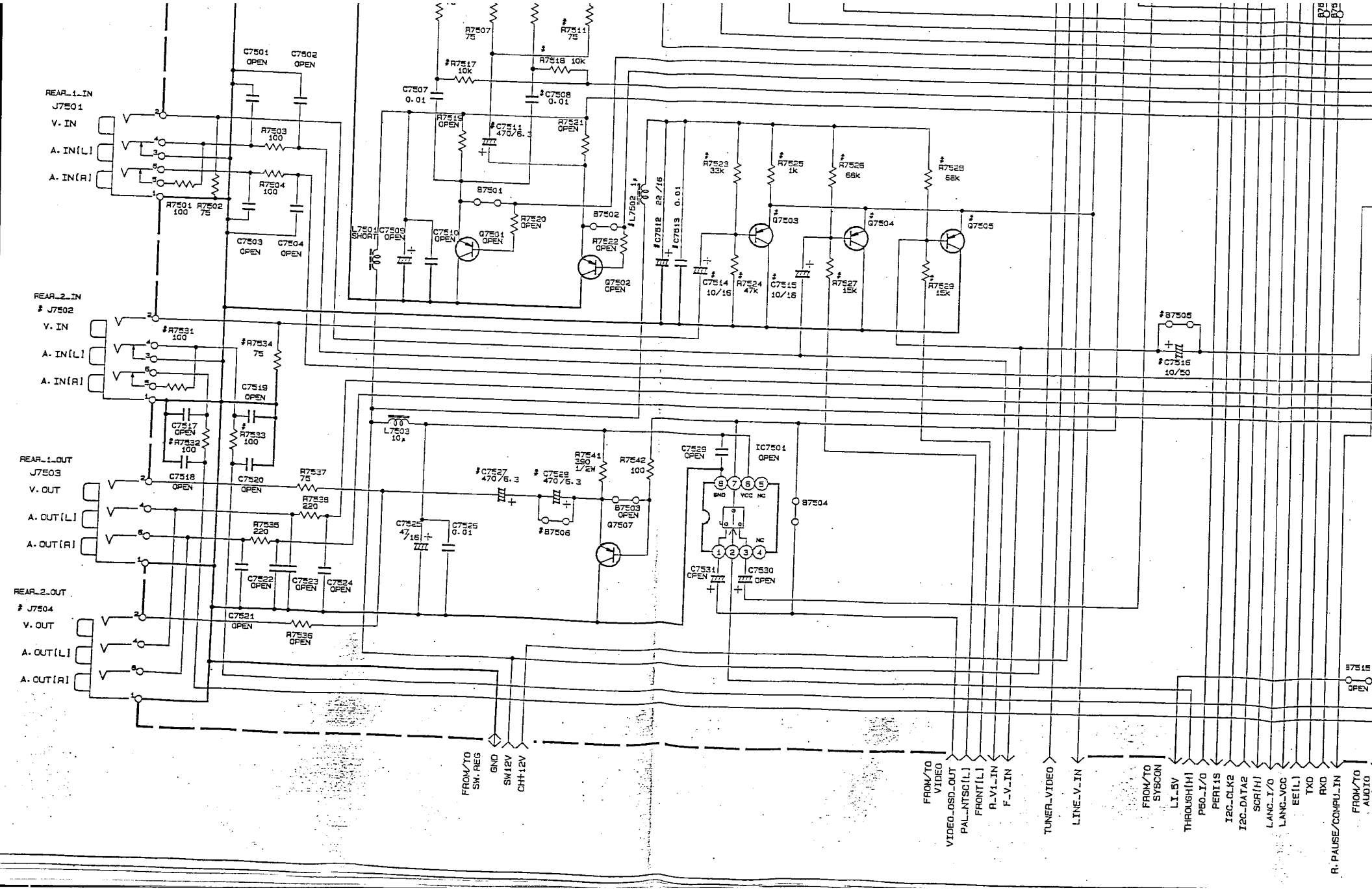
REAR_1_IN
J7501
V. IN
A. IN[L]
A. IN[R]
REAR_2_IN
J7502
V. IN
A. IN[L]
A. IN[R]
REAR_1_OUT
J7503
V. OUT
A. OUT[L]
A. OUT[R]
REAR_2_OUT
J7504
V. OUT
A. OUT[L]
A. OUT[R]
C7501 OPEN
C7502 OPEN
R7503 100
R7504 100
R7501 100
R7502 75
C7503 OPEN
C7504 OPEN
R7507 75
R7511 75
#R7517 10k
R7518 10k
C7507 0.01
#C7508 0.01
R7519 OPEN
#C7511 470/6.3
R7521 OPEN
#R7523 33k
R7525 1k
R7526 68k
R7528 68k
B7501
R7520 OPEN
B7502
R7522 OPEN
L7501 SHORT
C7509 OPEN
C7510 OPEN
Q7501 OPEN
Q7502 OPEN
#L7502 FERRITE
#C7512 22/16
#C7513 0.01
Q7503
Q7504
Q7505
#C7514 10/16
#R7524 47k
#C7515 10/16
#R7527 15k
#R7529 15k
#B7505
#C7516 10/50
#R7531 100
#R7534 75
C7519 OPEN
C7517 OPEN
#R7532 100
#R7533 100
L7503 10μ
C7518 OPEN
C7520 OPEN
R7537 75
R7538 220
R7535 220
C7522 OPEN
C7523 OPEN
C7524 OPEN
C7521 OPEN
R7536 OPEN
#C7527 470/6.3
#C7529 470/6.3
#B7506
C7525 47/16
C7526 0.01
R7541 360 1/2W
R7542 100
B7503 OPEN
Q7507
C7529 OPEN
IC7501 OPEN
GND
VCC
NC
B7504
C7531 OPEN
C7530 OPEN
B7515 OPEN
FROM/TO SW. REG
GND
SW12V
CH+12V
FROM/TO VIDEO
VIDEO_OSD_OUT
PAL_NTSC[L]
FRONT[L]
R_V1_IN
F_V_IN
TUNER_VIDEO
LINE_V_IN
FROM/TO SYSCON
LI_5V
THROUGH[H]
P50_I/O
PERI1S
I2C_CLK2
I2C_DATA2
SCR[H]
LANG_I/O
LANG_VCC
EE[L]
TXD
RXD
R. PAUSE/COMPU_IN
FROM/TO AUDIO

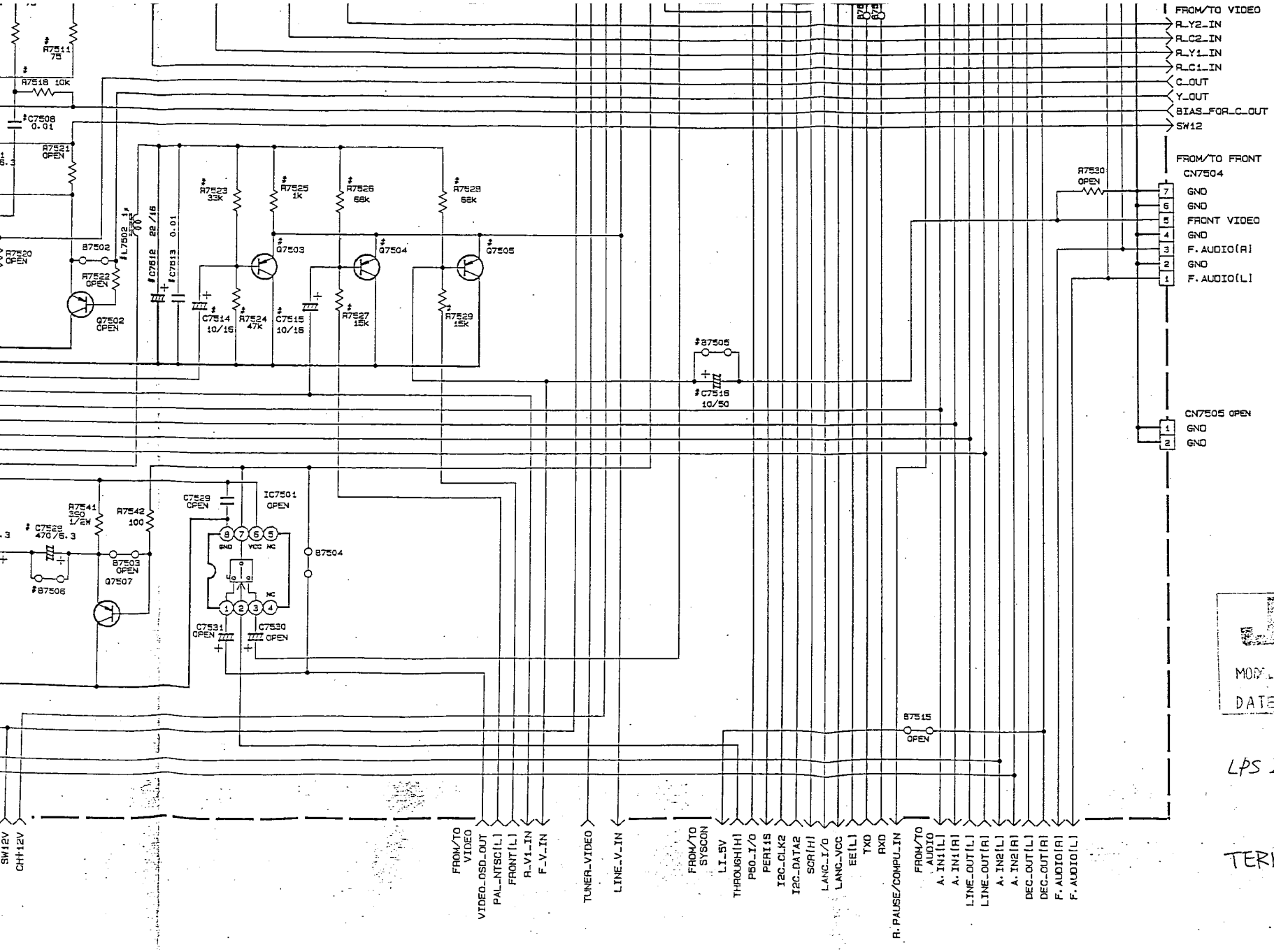

JVC
MODEL HR-S4600U
DATE DEC. 21. 1998

LPS 20122-001

TERMINAL

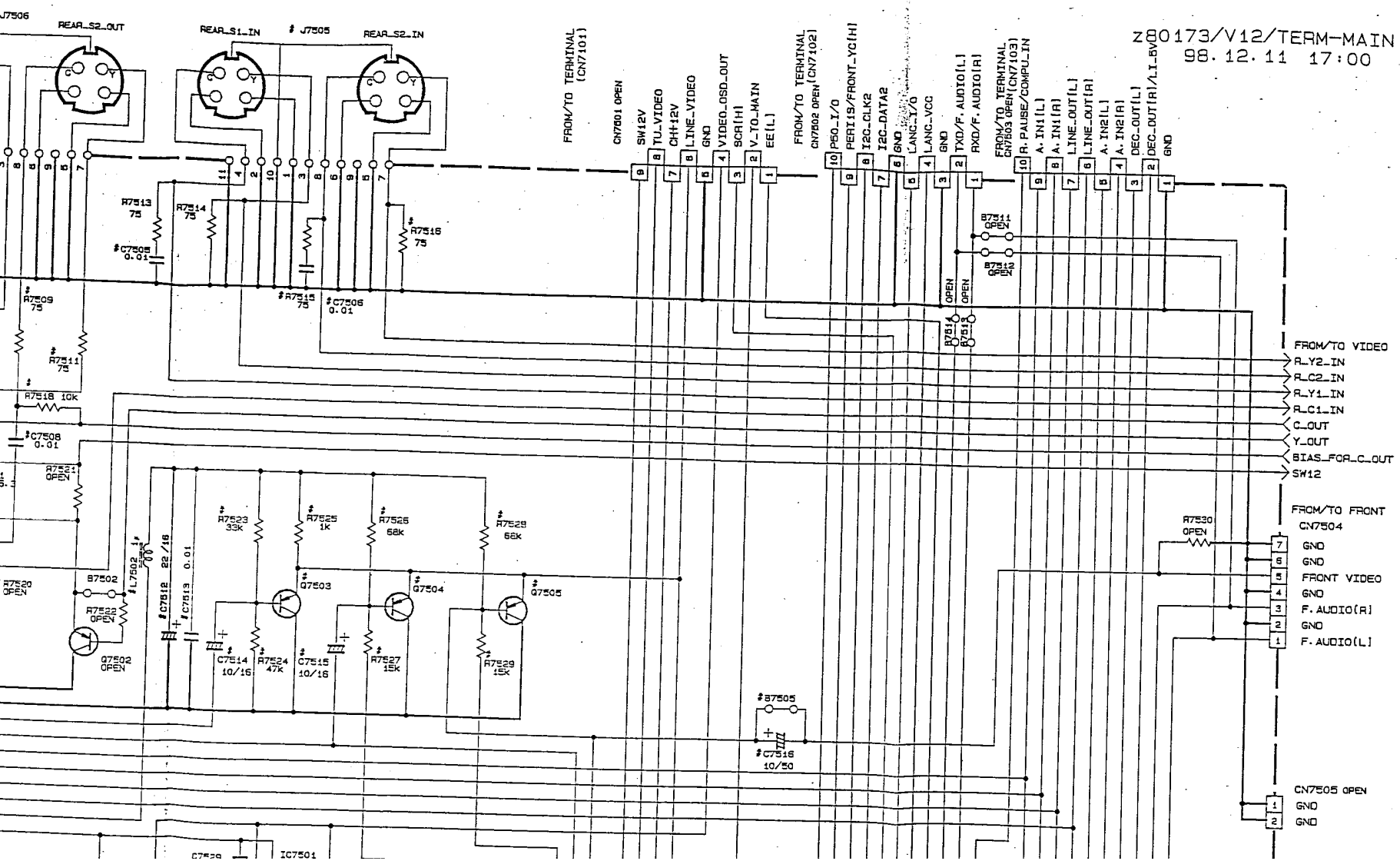
Z80173/V12/TERM-MAIN
98.12.11 17:00
J7506
REAR_S2_OUT
REAR_S1_IN
J7505
REAR_S2_IN
FROM/TO TERMINAL (CN7101)
CN7801 OPEN
SW12V
TU_VIDEO
CH+12V
LINE_VIDEO
GND
VIDEO_OSD_OUT
SCA(H)
V_TO_MAIN
EE(L)
FROM/TO TERMINAL CN7502 OPEN (CN7102)
P50_I/O
PERI19/FRONT_YC(H)
I2C_CLK2
I2C_DATA2
GND
LANG_I/O
LANG_VCC
GND
TXD/F. AUDIO(L)
RXD/F. AUDIO(R)
FROM/TO TERMINAL CN7603 OPEN (CN7103)
R. PAUSE/COMPU_IN
A. IN1(L)
A. IN1(R)
LINE_OUT(L)
LINE_OUT(R)
A. IN2(L)
A. IN2(R)
DEC_OUT(L)
DEC_OUT(R)/LI_5V
GND
R7513 75
R7514 75
C7505 0.01
R7515 75
C7506 0.01
R7516 75
R7509 75
R7511 75
R7518 10k
C7508 0.01
R7521 OPEN
R7520 OPEN
B7502
L7502 0.01
R7522 OPEN
Q7502 OPEN
C7512 22/16
C7513 0.01
R7523 33k
R7525 1k
R7526 68k
R7528 68k
Q7503
Q7504
Q7505
C7514 10/16
R7524 47k
C7515 10/16
R7527 15k
R7529 15k
B7505
C7516 10/50
IC7501
B7511 OPEN
B7512 OPEN
B7514 OPEN
B7513 OPEN
FROM/TO VIDEO
R_Y2_IN
R_C2_IN
R_Y1_IN
R_C1_IN
C_OUT
Y_OUT
BIAS_FOR_C_OUT
SW12
R7530 OPEN
FROM/TO FRONT CN7504
GND
GND
FRONT VIDEO
GND
F. AUDIO(R)
GND
F. AUDIO(L)
CN7505 OPEN
GND
GND

TO SEPA-V/L-SEPA
PB(H)
CC(R)(L)
FSC
3.58MTSC(H)
CLOTDIGI
V/L-TO-DIGI
Y-FROM-DIGI
C-FROM-DIGI
FROM TO SEPA
R1035 OPEN
R1008 OPEN
R1009 OPEN
R1005 OPEN
R1007 OPEN
C1007 OPEN
R1045 4.7K
C1002 0.47/50
C1003 10/16
R1052 OPEN
R1039 390K
C1005 4.3/25
C1006 0.01
C1025 0.1
R1006 220K
C1038 2.2/50
C1037 2.2/50
C1036 4.7/25
C1022 1/50
C1008 OPEN
C1021 0.1
C1027 0.1
C1020 0.01
R1007 47K
C1019 0.01
C1023 2.2/50
C1024 0.01
C1013 0.1
C1014 2.2/50
C1015 4.7/50
C1016 2.2/50
C1012 OPEN
R1040 100
R1050 100
C1010 0.1
C1011 22
R1003 220
R1004 100
C1009 0.01
C1050 0.1
C1056 0.01
C1055 0.01
C1054 0.01
C1053 0.01
C1052 0.1
C1051 100/6.3
C1007 100/6.3
C1008 0.01
C1018 0.1
C1017 10/16
C1001 4.7/25
C1004 4.7/25
C1003 1/50
C1002 1/50
C1001 1/50
C1000 1/50
C1026 0.1
C1028 2.2/50
C1029 0.1
C1030 2.2/50
C1031 1/50
C1032 1/50
C1033 1/50
C1034 1/50
C1035 1/50
C1036 1/50
C1037 1/50
C1038 1/50
C1039 1/50
C1040 1/50
C1041 1/50
C1042 1/50
C1043 1/50
C1044 1/50
C1045 1/50
C1046 1/50
C1047 1/50
C1048 1/50
C1049 1/50
C1050 1/50

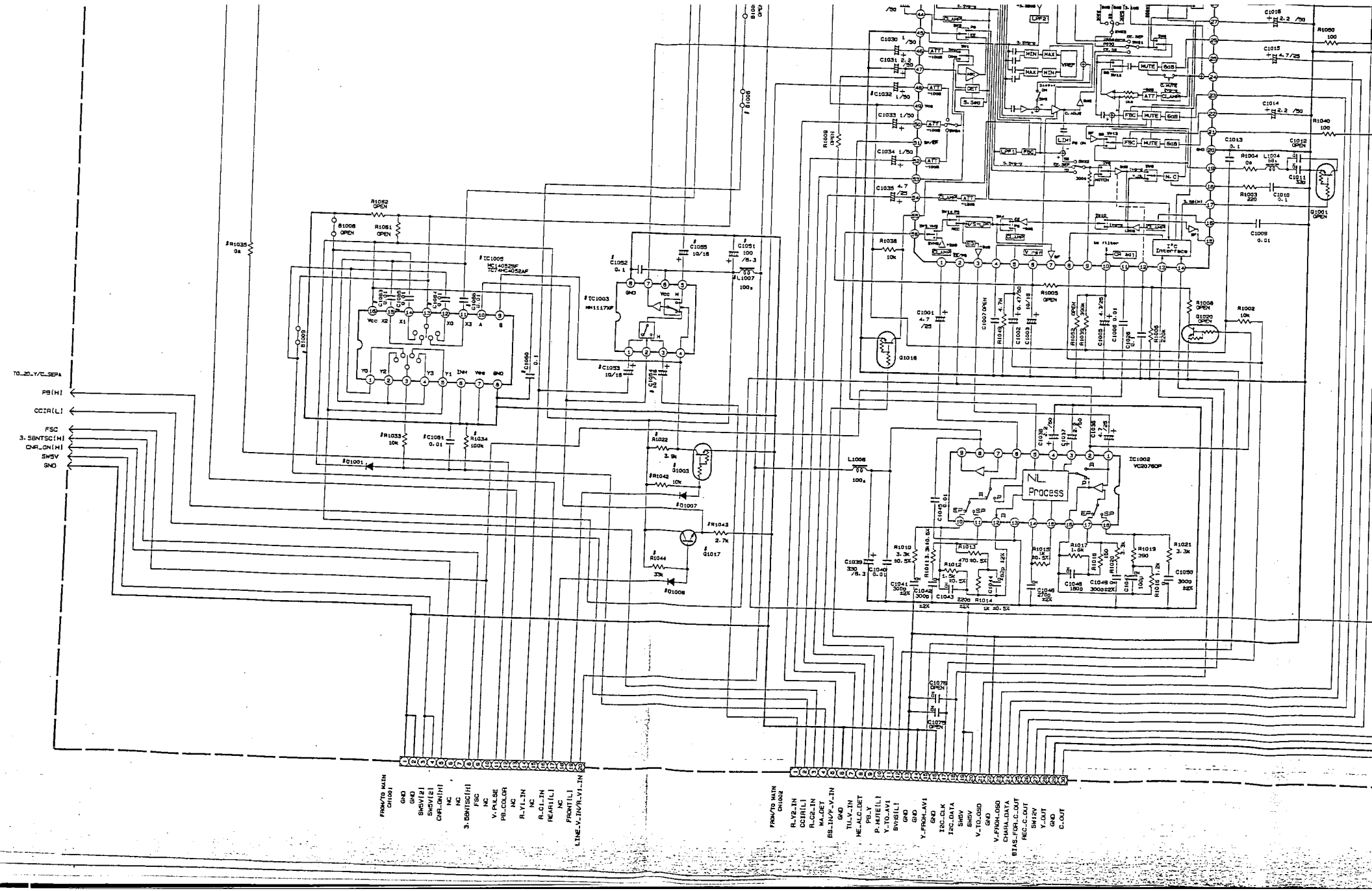
TO_2D_Y/C_SEPA
PB(H)
CCIR(L)
FSC
3.58NTSC(H)
CNR_ON(H)
5V5V
GND
FROM/TO MAIN CN1001
GND
GND
5V5V(2)
5V5V(2)
CNR_ON(H)
NC
NC
3.58NTSC(H)
FSC
NC
V.PULSE
PB_COLOR
NC
R.Y1_IN
NC
R.C1_IN
REAR(L)
NC
FRONT(L)
LINE_V_IN/R.V1_IN
FROM/TO MAIN CN1002
R.Y2_IN
CCIR(L)
R.C2_IN
NA_DET
BS_IN/F_V_IN
GND
TU_V_IN
NE_ALC_DET
PB_Y
P_MUTE(L)
Y_TO_AV1
BV5V(L)
GND
GND
Y_FROM_AV1
GND
I2C_CLK
I2C_DATA
5V5V
5V5V
V_TO_OSD
GND
V_FROM_OSD
CHARA_DATA
BIAS_FOR_C_OUT
REC_C_OUT
5V12V
Y_OUT
GND
C_OUT
IC1005
MC14052BF
TC74HC4052AF
IC1003
M51137BP
IC1002
VC2076OP
NL Process
I²C Interface
LPF2
LPF1
MIN
MAX
VREF
ATT
MUTE
CLAMP
FSC
SOS
L.DK
N.C
SWITCH
DET
S.SEQ
G1001 OPEN
G1016
G1017
G1003
G1000 OPEN
R1062 OPEN
R1061 OPEN
R1008 OPEN
R1009 OPEN
R1035 0Ω
R1033 10k
R1034 100k
R1022 3.9k
R1042 10k
R1043 2.7k
R1044 33k
R1038 10k
R1005 OPEN
R1002 10k
R1050 100
R1040 100
R1003 220
R1004 0Ω
L1004 56μ
L1006 100μ
L1007 100μ
D1001
D1007
D1008
C1078 OPEN
C1077 OPEN

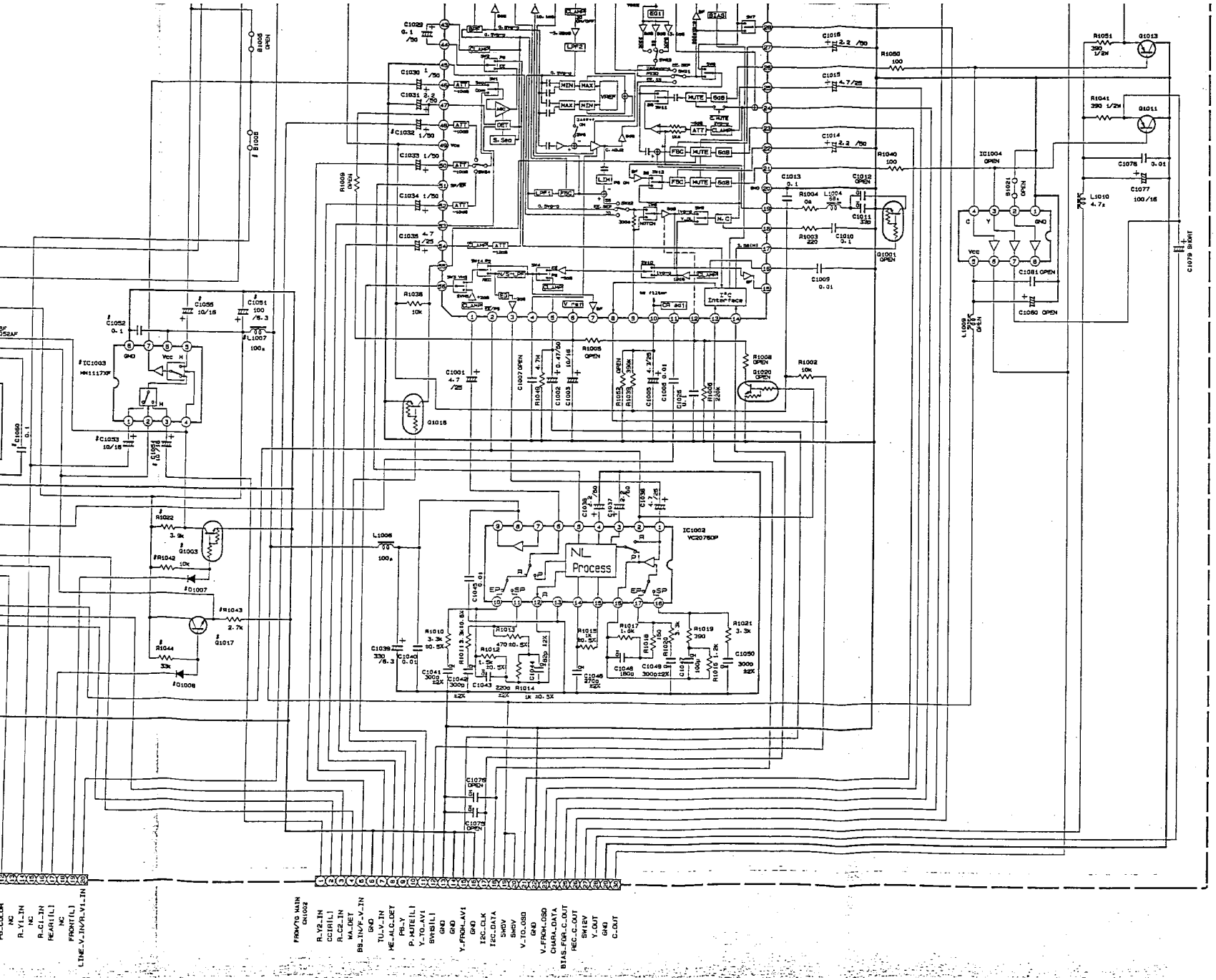

JVC

MODEL HR-S6600U

DATE DEC. 21. 1998

LPS 10180-001

S VHS (VIDEO)

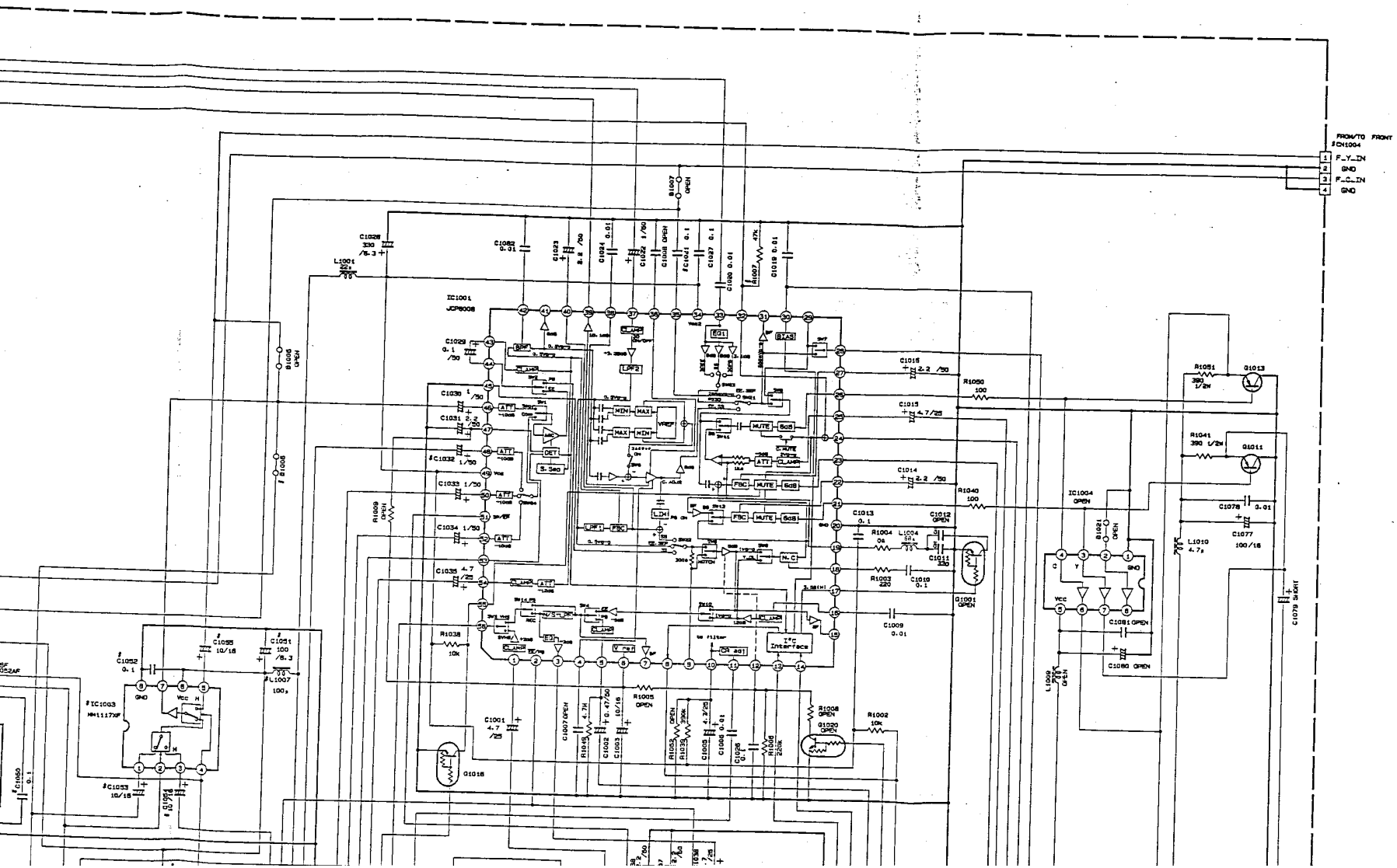
FROM/TO FRONT
#CN1004
F_Y_IN
GND
F_C_IN
GND
IC1001
JCP6008
IC1003
HM1117KF
IC1004
OPEN
Q1013
Q1011
Q1016
Q1001
OPEN
Q1020
OPEN
R1051
390 1/2W
R1041
390 1/2W
R1050
100
R1040
100
R1038
10k
R1002
10k
R1008
OPEN
R1005
OPEN
R1009
OPEN
R1021
OPEN
L1009
OPEN
L1010
4.7μ
C1078
0.01
C1077
100/16
C1079 SHORT
C1080 OPEN
C1081 OPEN
C1055
10/16
C1051
100
/6.3
C1052
0.1
C1053
10/16
C1060
0.1
C1001
4.7
/25
C1007 OPEN
R1045
4.7k
C1002
0.47/50
C1003
10/16
R1052
OPEN
R1039
390k
C1005
4.7/25
C1006
0.01
C1025
0.1
R1006
220k
C1009
0.01
C1010
0.1
R1003
220
C1011
330
C1012
OPEN
C1013
0.1
R1004
04
L1004
C1014
2.2 /50
C1015
4.7/25
C1016
2.2 /50
C1029
0.1
/50
C1030
1/50
C1031
2.2
/50
C1032
1/50
C1033
1/50
C1034
1/50
C1035
4.7
/25
C1026
330
/6.3
C1022
1/50
C1024
0.01
C1023
2.2 /50
C1027
0.1
C1030
0.01
C1019
0.01
R1007
47k
B1007
OPEN
B1006
OPEN
B1008
OPEN
L1001
22μ
/6.3
BPF
LPF2
LPF1
MIN
MAX
VREF
ATT
DET
S-SEP
MUTE
SGB
FSC
EQ1
BIAS
N.C
I²C Interface
CR adj
V-reg
GND
Vcc
H
L
G
Y
C

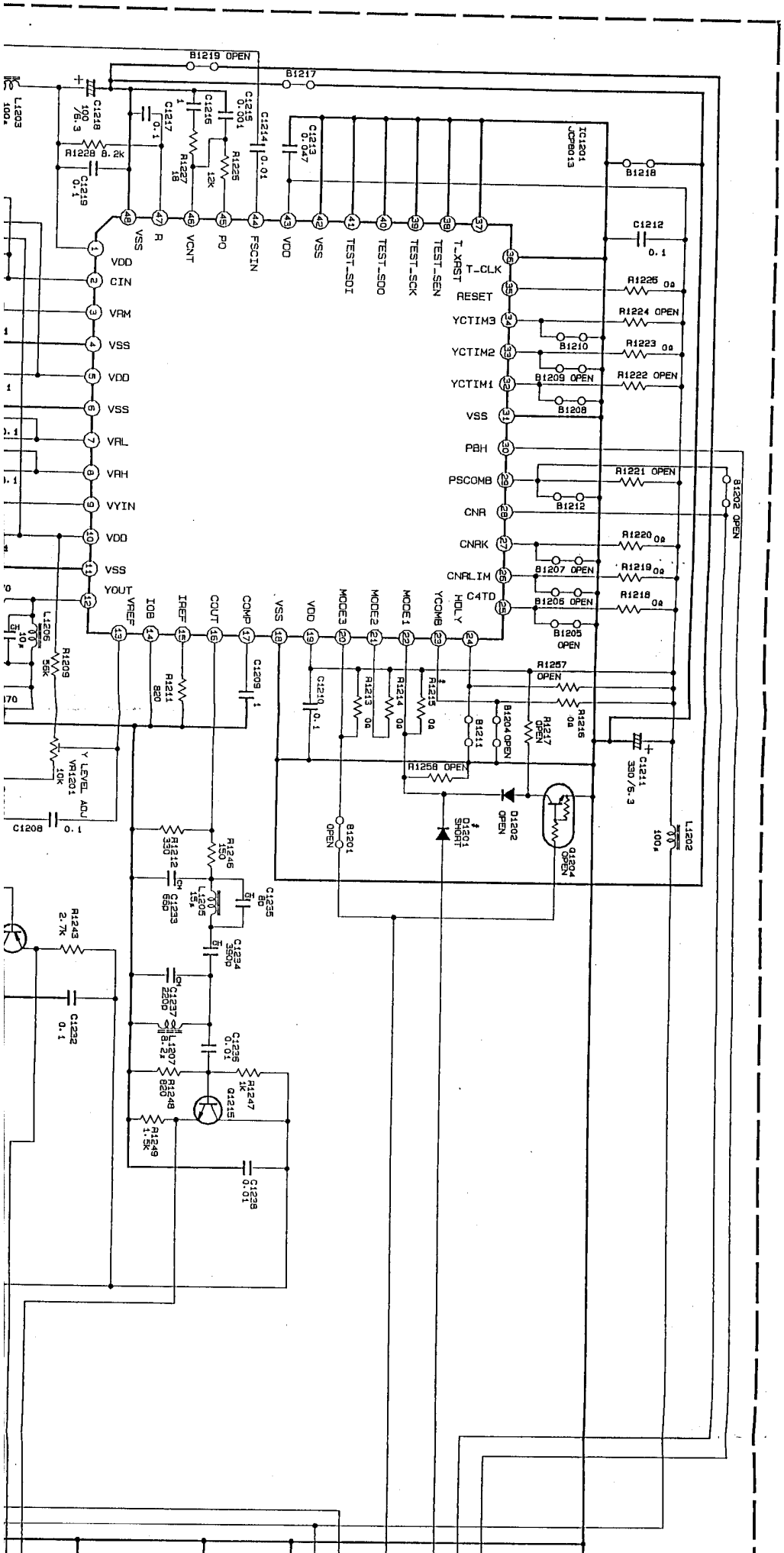
IC1201
JCP8013
VDD
CIN
VRM
VSS
VDD
VSS
VRL
VRH
VYIN
VDD
VSS
YOUT
VREF
IOB
IREF
COUT
COMP
VSS
VDD
MODE3
MODE2
MODE1
YCOMB
HOLY
C4TD
CNRLIM
CNRK
CNR
PSCOMB
PBH
VSS
YCTIM1
YCTIM2
YCTIM3
RESET
T_CLK
T_XRST
TEST_SEN
TEST_SCK
TEST_SDO
TEST_SDI
VSS
VDD
FSCIN
PO
VCNT
R
VSS
B1219 OPEN
B1217
B1218
B1210
B1209 OPEN
B1208
B1221 OPEN
B1212
B1207 OPEN
B1206 OPEN
B1205 OPEN
B1202 OPEN
B1204 OPEN
B1211
B1201 OPEN
R1226 0Ω
R1224 OPEN
R1223 0Ω
R1222 OPEN
R1221 OPEN
R1220 0Ω
R1219 0Ω
R1218 0Ω
R1257 OPEN
R1216 0Ω
R1217 OPEN
R1258 OPEN
R1213 0Ω
R1214 0Ω
R1215 0Ω
D1201 SHORT
D1202 OPEN
D1204 OPEN
C1212 0.1
C1211 330/6.3
L1202 100μ
C1210 0.1
C1209 1
R1211 820
R1209 56K
L1205 10μ
Y LEVEL ADJ
VR1201 10K
C1208 0.1
R1212 330
R1246 150
C1233 68P
L1205 15μ
C1235 8P
C1234 390P
R1243 2.7K
C1232 0.1
C1237 220P
L1207 8.2μ
C1236 0.01
R1248 820
R1247 1K
Q1215
R1249 1.5K
C1238 0.01
L1203 100μ
C1218 100/6.3
R1228 8.2K
C1219 0.1
C1217 0.1
C1216 1
R1227 18
R1225 12K
C1215 0.001
C1214 0.01
C1213 0.047

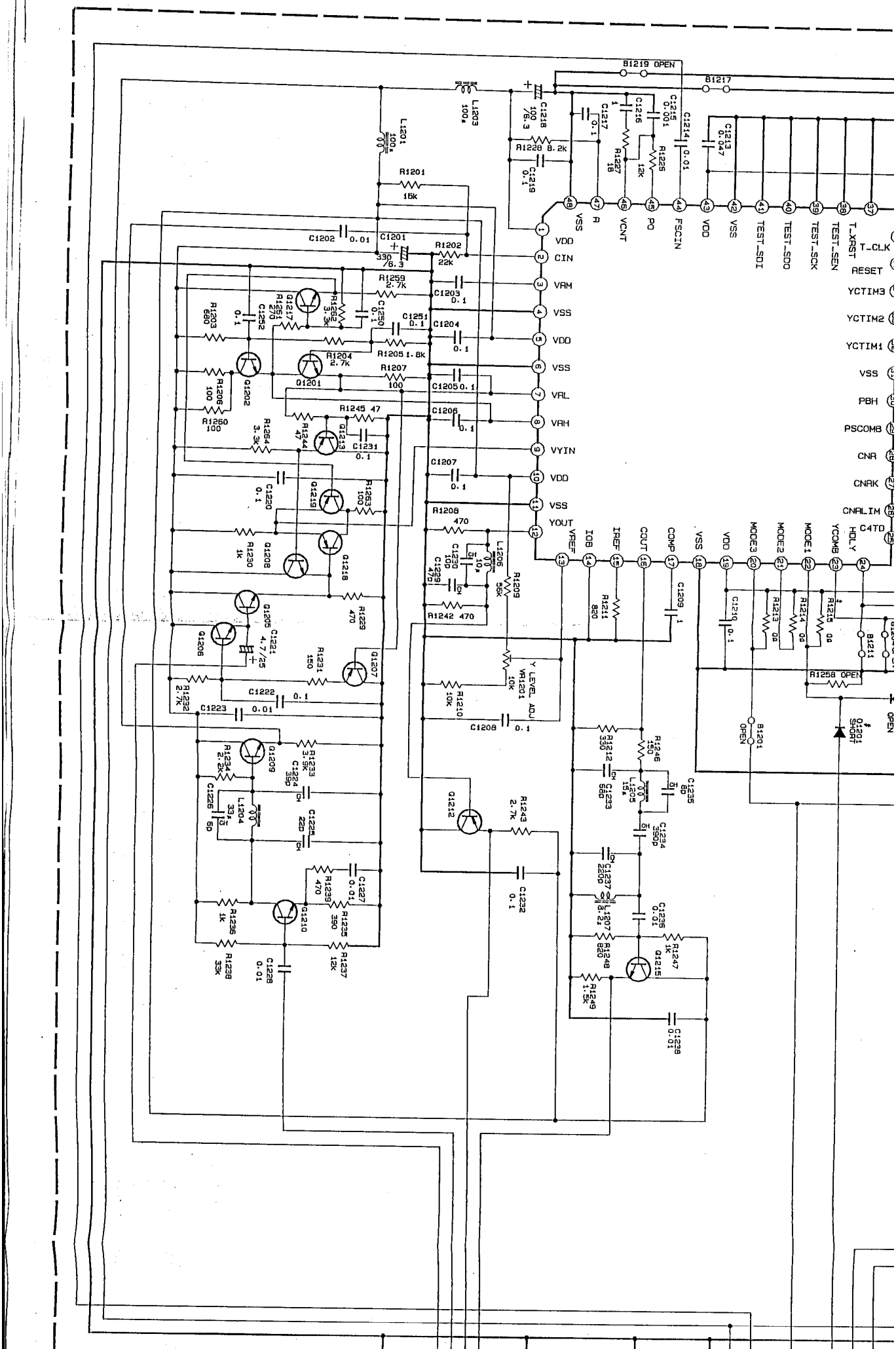
B1219 OPEN
B1217
L1203 100μ
L1201 100μ
C1218 100 /6.3
R1228 8.2k
C1219 0.1
C1217 0.1
C1216 1
R1227 18
R1225 12k
C1215 0.001
C1214 0.01
C1213 0.047
R1201 15k
C1202 0.01
C1201 330 /6.3
R1202 22k
R1259 2.7k
C1203 0.1
C1250 0.1
C1251 0.1
C1204 0.1
R1205 1.8k
R1204 2.7k
R1207 100
C1205 0.1
R1245 47
C1206 0.1
C1231 0.1
C1207 0.1
R1208 470
L1206 10μ
C1229 470p
R1242 470
R1209 56k
Y LEVEL ADJ VR1201 10k
R1210 10k
C1208 0.1
R1211 820
C1209 1
C1210 0.1
R1213 0Ω
R1214 0Ω
R1215 0Ω
B1211
R1258 OPEN
B1201 OPEN
D1201 SHORT
OPEN
R1212 330
R1246 150
L1205 15μ
C1233 560
C1235 6p
C1234 390p
C1237 220p
L1207 0.2μ
C1236 0.01
R1248 820
R1247 1k
Q1215
R1249 1.5k
C1238 0.01
R1243 2.7k
Q1212
C1232 0.1
VSS
A
VCNT
PO
FSCIN
VDD
VSS
TEST_SDI
TEST_SDO
TEST_SCK
TEST_SEN
T_XRST
T_CLK
RESET
YCTIM3
YCTIM2
YCTIM1
VSS
PBH
PSCOMB
CNR
CNRK
CNRLIM
C4TD
VDD
CIN
VRM
VSS
VDD
VSS
VRL
VRH
VYIN
VDD
VSS
YOUT
VREF
IOB
IREF
COUT
COMP
VSS
VDD
MODE3
MODE2
MODE1
YCOMB
HDLY
Q1203 680
R1203 680
C1252 0.1
R1250 100
R1251 5.6k
C1250 0.1
Q1217
Q1202
Q1201
R1206 100
R1260 100
R1254 3.3k
R1244 47
Q1213
C1220 0.1
Q1219
R1253 100
R1230 1k
Q1208
Q1218
Q1205
Q1206
C1221 4.7/25
R1229 470
R1231 150
Q1207
R1232 2.7k
C1222 0.1
C1223 0.01
Q1209
R1233 3.9k
R1234 2.2k
C1224 390p
C1226 6p
L1204 33μ
C1225 220p
R1239 470
C1227 0.01
Q1210
R1235 390
R1236 1k
R1238 33k
R1237 12k
C1228 0.01

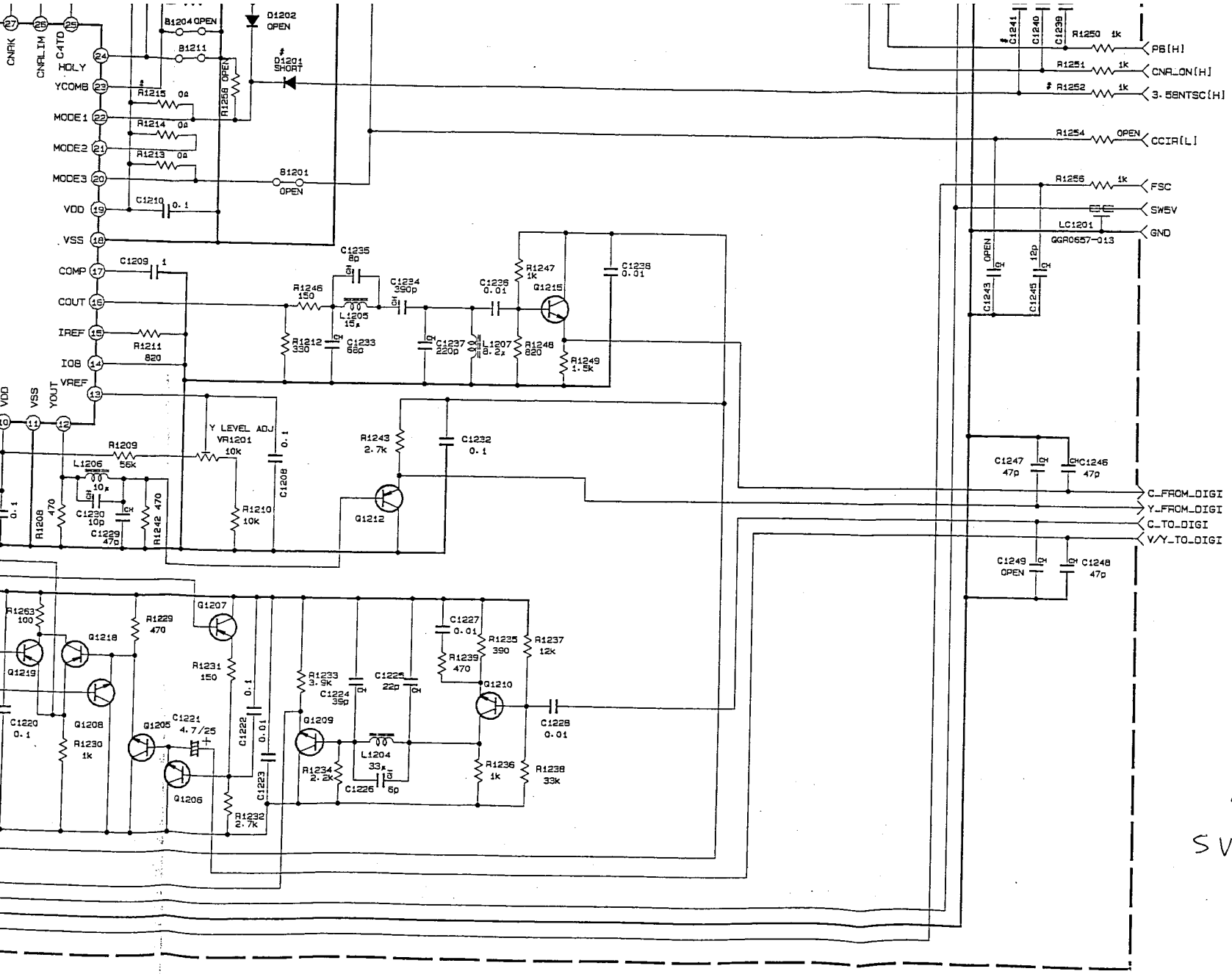

JVC

MODEL HR-S4600U

DATE DEC. 21. 1998

LPS 20123 -001

S VHS (2DY/C)

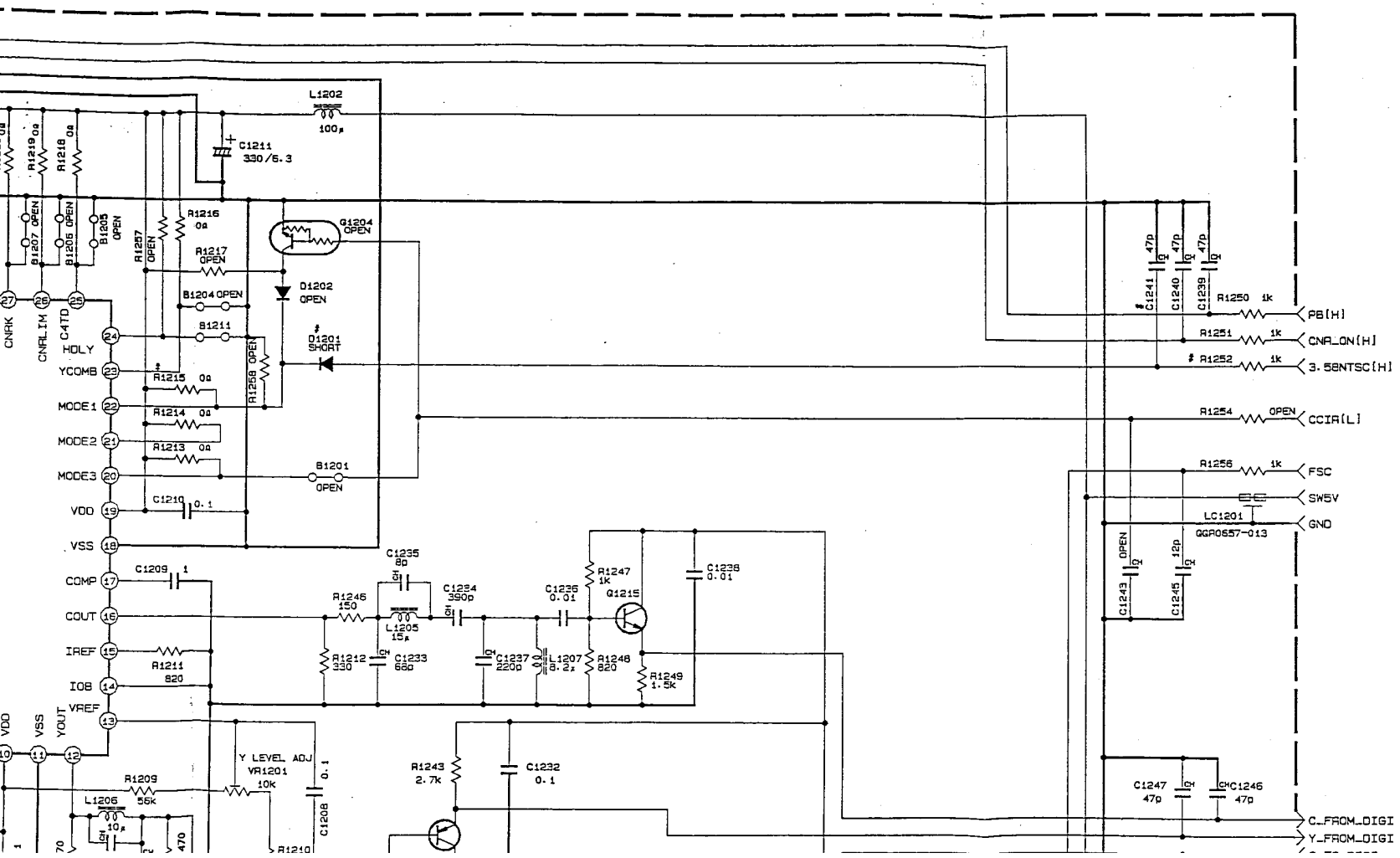
L1202
100μ
C1211
330/6.3
R1219 0Ω
R1218 0Ω
B1207 OPEN
B1206 OPEN
B1205 OPEN
R1257 OPEN
R1216 0Ω
R1217 OPEN
G1204 OPEN
D1202 OPEN
B1204 OPEN
B1211
D1201 SHORT
R1258 OPEN
R1215 0Ω
R1214 0Ω
R1213 0Ω
B1201 OPEN
C1210 0.1
CNPK
CNPLTM
C4TD
HOLY
YCOMB
MODE1
MODE2
MODE3
VDD
VSS
COMP
COUT
IREF
IOB
VREF
YOUT
C1209 1
R1211 820
R1209 55k
L1206 10μ
Y LEVEL ADJ
VR1201 10k
C1208 0.1
R1210 470
C1235 8p
L1205 15μ
R1246 150
R1212 330
C1233 68p
C1234 390p
C1237 220p
C1236 0.01
L1207 8.2μ
R1247 1k
G1215
R1248 820
R1249 1.5k
C1238 0.01
R1243 2.7k
C1232 0.1
C1241 47p
C1240 47p
C1239 47p
R1250 1k
R1251 1k
R1252 1k
R1254 OPEN
R1256 1k
LC1201 GQA0657-013
C1243 OPEN
C1245 12p
C1247 47p
C1246 47p
PB[H]
CNA_ON[H]
3.58NTSC[H]
CCIA[L]
FSC
SW5V
GND
C_FROM_DIGI
Y_FROM_DIGI

USE OF OTHER DIV.

REVISIONS

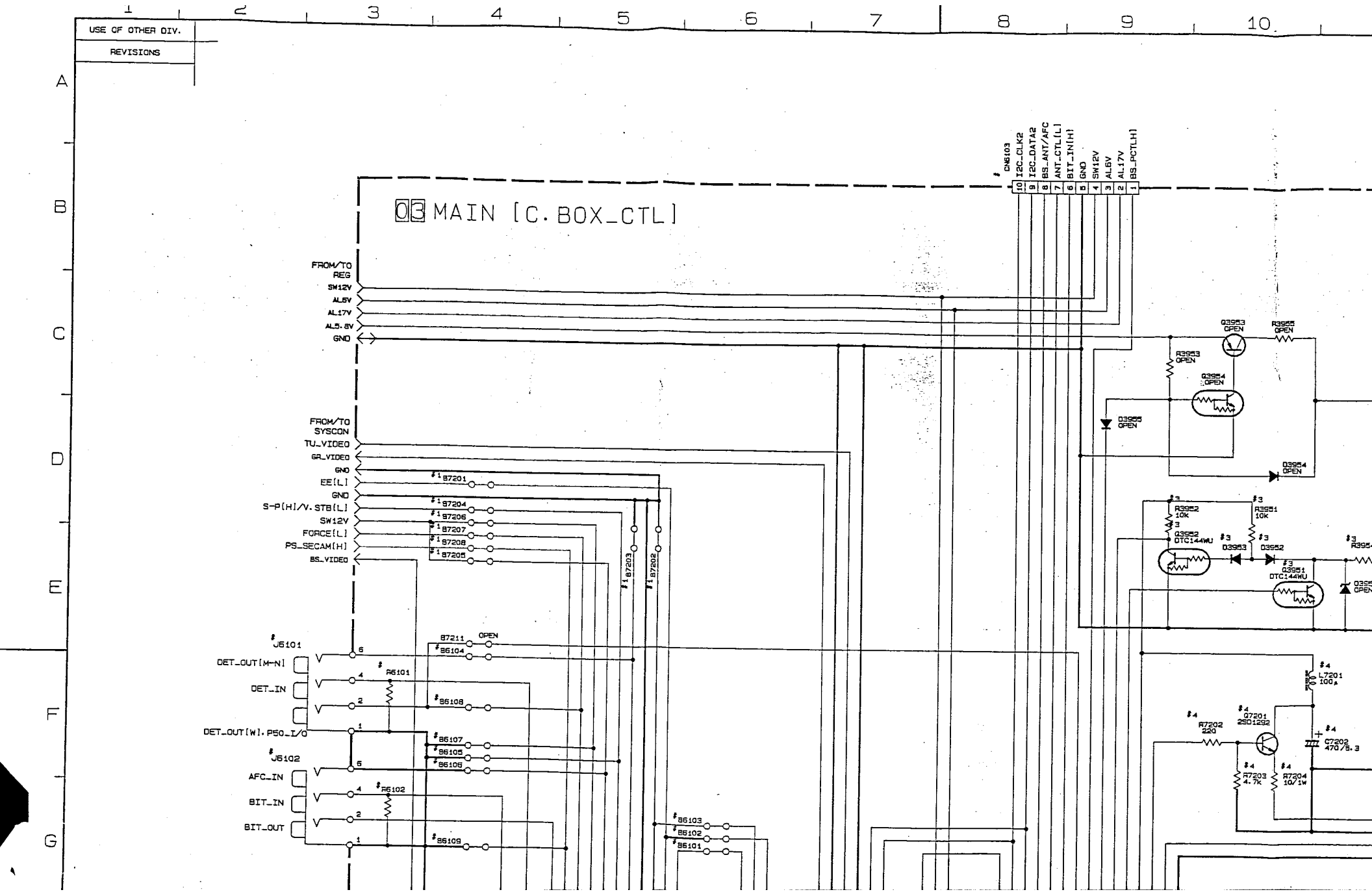

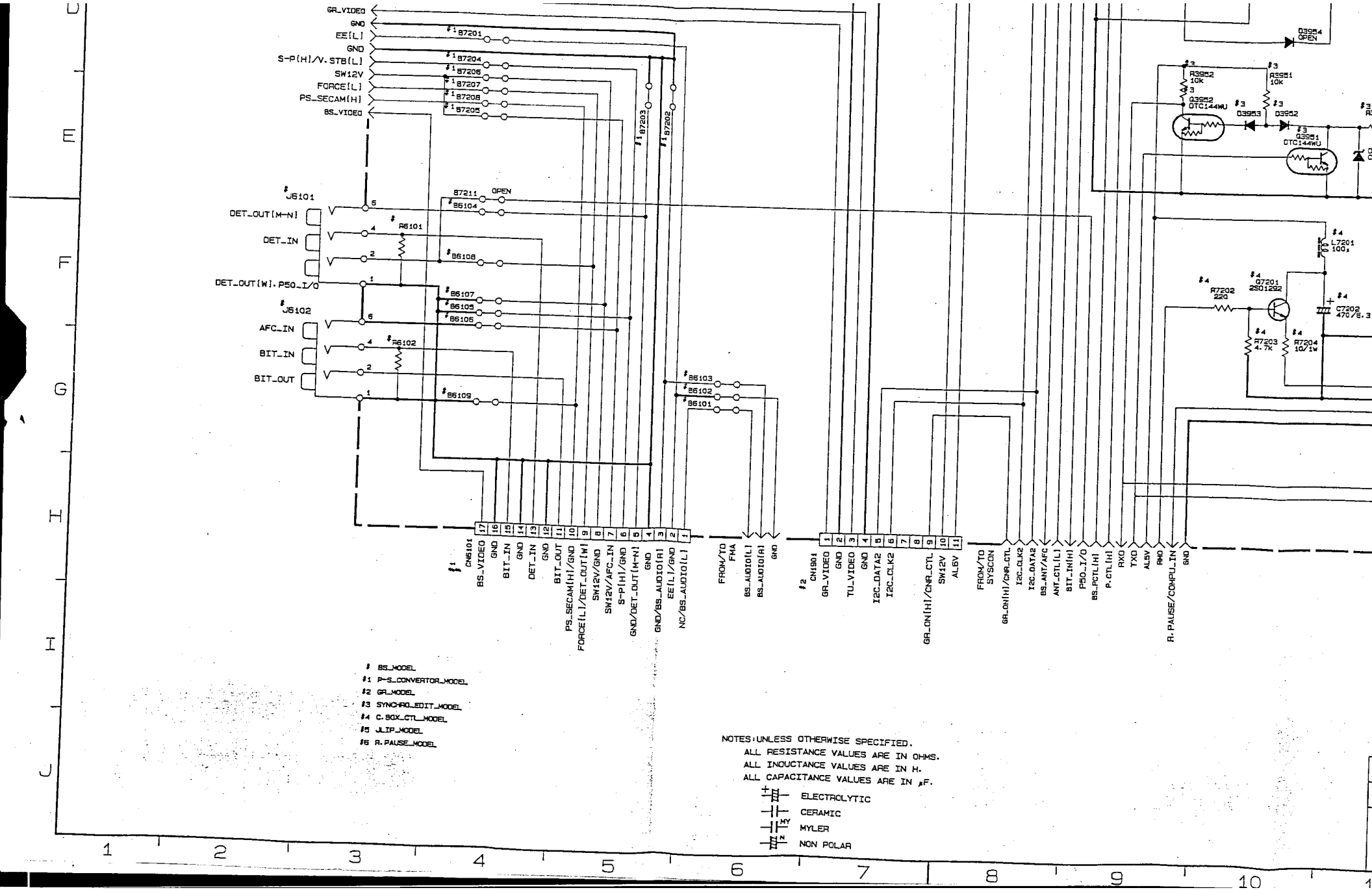
GR_VIDEO
GND
EE[L]
GND
S-P[H]/V.STB[L]
SW12V
FORCE[L]
PS_SECAM[H]
BS_VIDEO
J6101
DET_OUT[M-N]
DET_IN
DET_OUT[W].P50_I/O
J6102
AFC_IN
BIT_IN
BIT_OUT
R6101
R6102
B7201
B7204
B7206
B7207
B7208
B7205
B7203
B7202
B7211
OPEN
B6104
B6108
B6107
B6105
B6106
B6109
B6103
B6102
B6101
CN6101
BS_VIDEO
GND
BIT_IN
GND
DET_IN
GND
BIT_OUT
PS_SECAM[H]/GND
FORCE[L]/DET_OUT[W]
SW12V/GND
SW12V/AFC_IN
S-P[H]/GND
GND/DET_OUT[M-N]
GND
GND/BS_AUDIO[R]
EE[L]/GND
NC/BS_AUDIO[L]
FROM/TO FMA
BS_AUDIO[L]
BS_AUDIO[R]
GND
CN1901
GR_VIDEO
GND
TU_VIDEO
GND
I2C_DATA2
I2C_CLK2
GR_ON[H]/CNR_CTL
SW12V
AL6V
FROM/TO SYSCON
GR_ON[H]/CNR_CTL
I2C_CLK2
I2C_DATA2
BS_ANT/AFC
ANT_CTL[L]
BIT_IN[H]
P50_I/O
BS_PCTL[H]
P.CTL[H]
RXD
TXD
AL5V
RMO
R.PAUSE/COMPU_IN
GND
D3954
OPEN
R3952
10k
D3952
DTC144WU
R3951
10k
D3953
D3952
D3951
DTC144WU
L7201
100μ
Q7201
2SD1292
R7202
220
C7202
470/6.3
R7203
4.7k
R7204
10/1W
BS_MODEL
#1 P-S_CONVERTOR_MODEL
#2 GR_MODEL
#3 SYNCHRO_EDIT_MODEL
#4 C.BOX_CTL_MODEL
#5 JLIP_MODEL
#6 R.PAUSE_MODEL
NOTES: UNLESS OTHERWISE SPECIFIED.
ALL RESISTANCE VALUES ARE IN OHMS.
ALL INDUCTANCE VALUES ARE IN H.
ALL CAPACITANCE VALUES ARE IN μF.
ELECTROLYTIC
CERAMIC
MYLER
NON POLAR

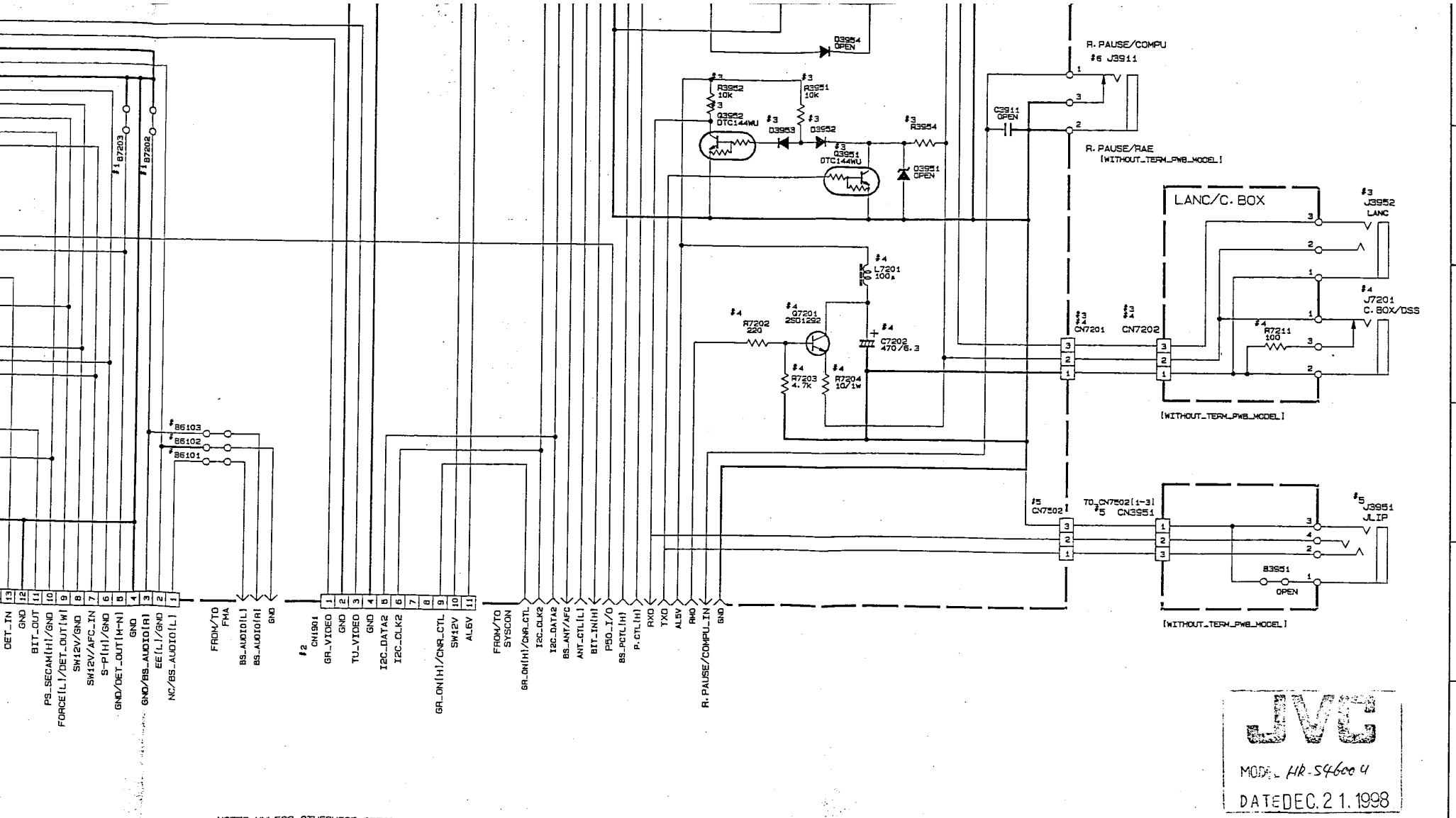

NOTES: UNLESS OTHERWISE SPECIFIED.
ALL RESISTANCE VALUES ARE IN OHMS.
ALL INDUCTANCE VALUES ARE IN H.
ALL CAPACITANCE VALUES ARE IN μF.

ELECTROLYTIC
CERAMIC
MYLER
NON POLAR

JVC
MODEL HR-S4600U
DATE DEC. 21. 1998

NAME	SCHEMATIC DIAGRAM OF C. BOX_CTL	SCALE	MATERIAL	FINISH	
GROUP NO.					
MODEL V12S36	APPROVED / CHECKED	DRAWN S. OHTSU	DESIGNED S. OHTSU	DRAWING NUMBER LPS20121	SHEET 1
		DATE 98. 12. 10		GROUP / USER	

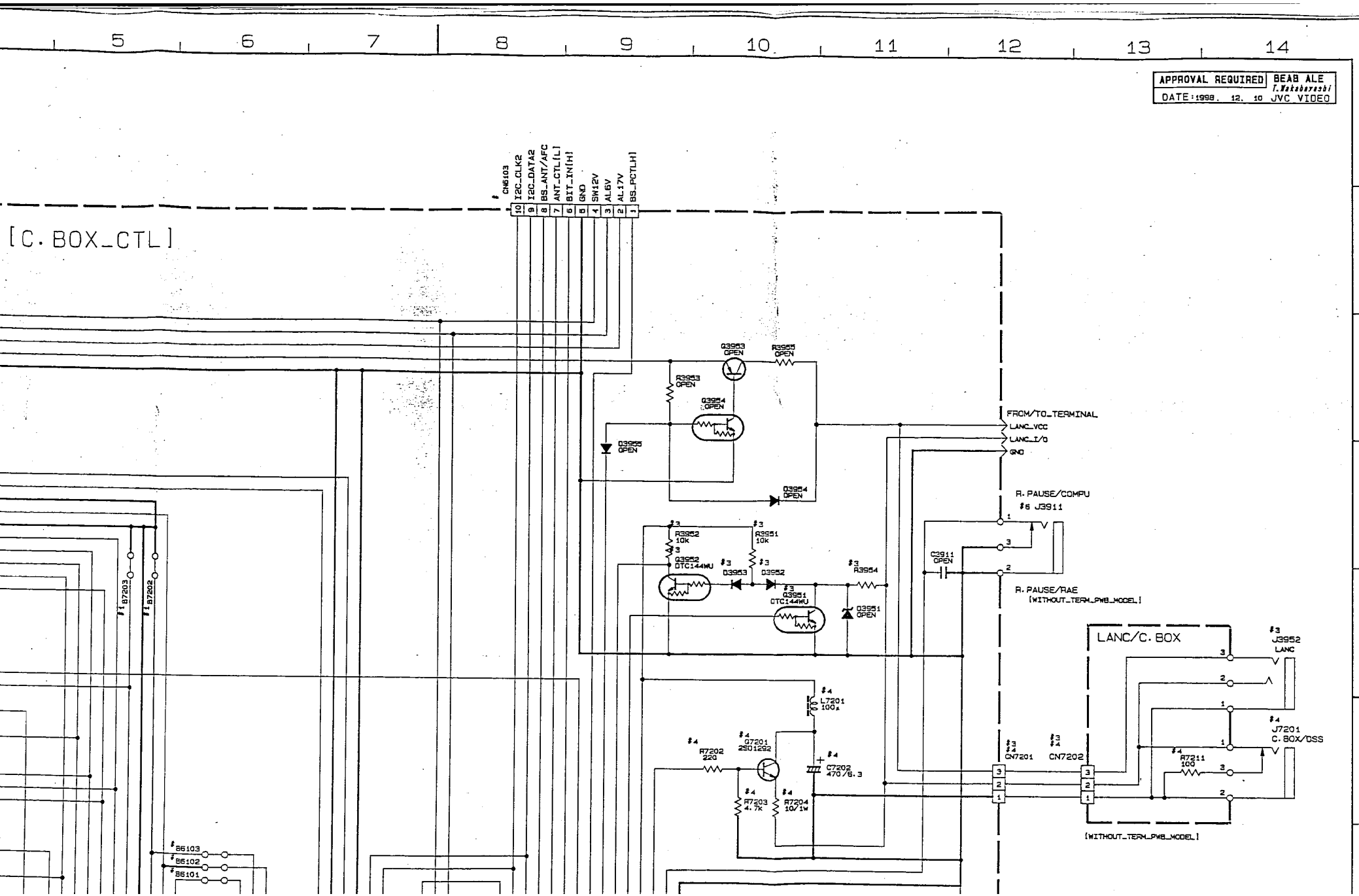
APPROVAL REQUIRED
BEAB ALE
T.Nakaberashi
DATE:1998. 12. 10
JVC VIDEO
[C.BOX_CTL]
CN6103
I2C_CLK2
I2C_DATA2
BS_ANT/AFC
ANT_CTL[L]
BIT_IN[H]
GND
SW12V
AL6V
AL17V
BS_PCTL[H]
Q3953 OPEN
R3955 OPEN
R3953 OPEN
Q3954 OPEN
Q3955 OPEN
Q3954 OPEN
R3952 10k
R3951 10k
Q3952 DTC144WU
D3953
D3952
Q3951 DTC144WU
R3954
Q3951 OPEN
C3911 OPEN
FROM/TO_TERMINAL
LANC_VCC
LANC_I/O
GND
R.PAUSE/COMPU
#6 J3911
R.PAUSE/RAE
[WITHOUT_TERM_PWB_MODEL]
LANC/C.BOX
J3952 LANC
J7201 C.BOX/DSS
L7201 100μ
R7202 220
Q7201 2SD1292
C7202 470/6.3
R7203 4.7k
R7204 10/1W
CN7201
CN7202
R7211 100
[WITHOUT_TERM_PWB_MODEL]
B7203
B7202
B6103
B6102
B6101