Block Diagram

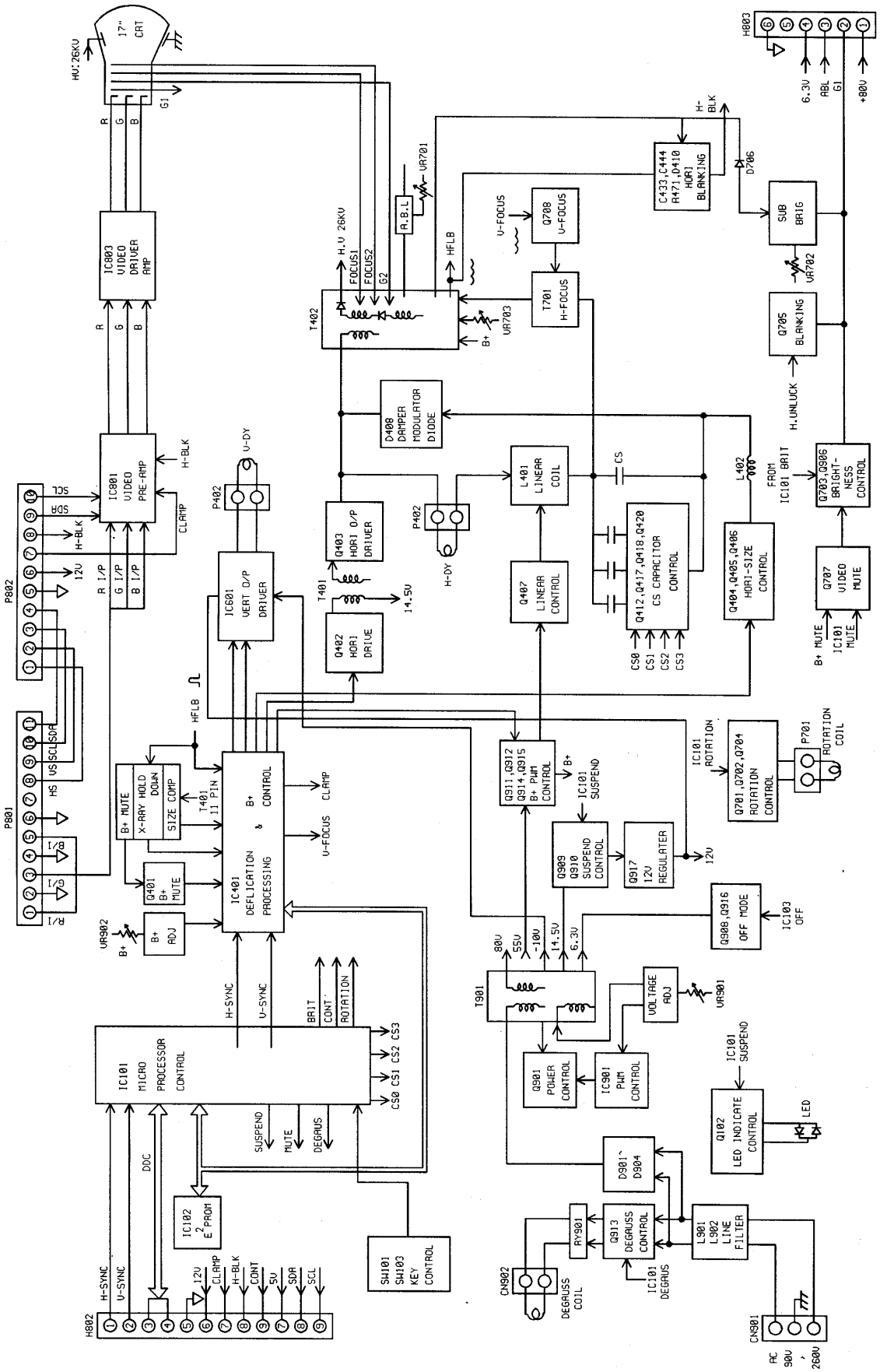

AUDIO BASE

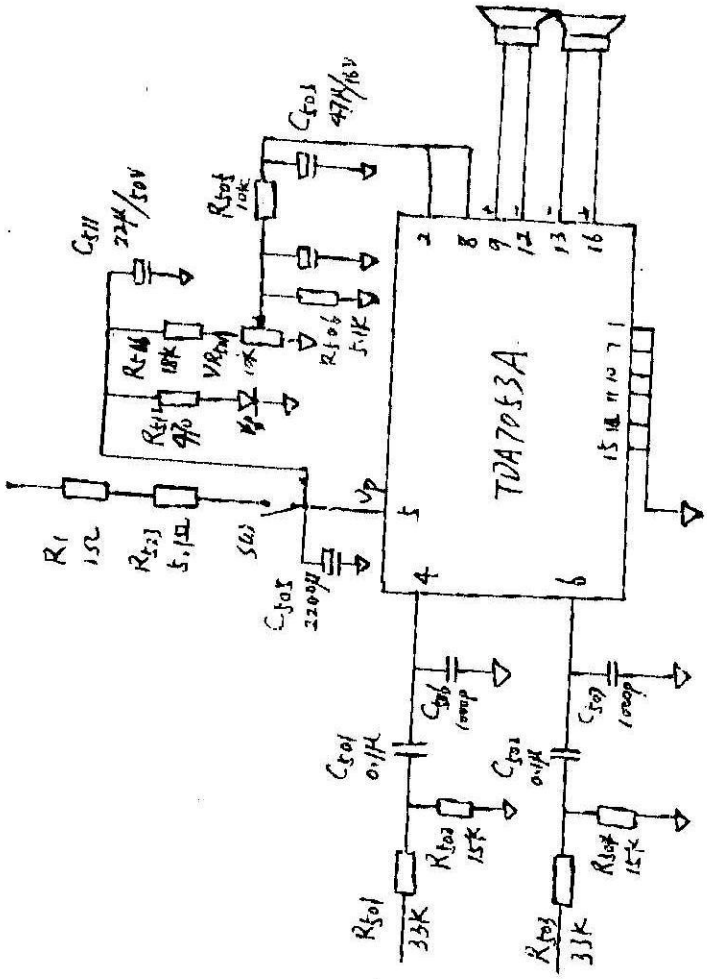
TDA7053A
R1
1Ω
SW1
C501
220μ/16V
C502
47μ/16V
C503
22μ/50V
R502
10K
R506
5.1K
C504
0.1μ
C505
0.1μ
R504
15K
R505
15K
R503
33K
R507
33K
C506
1000p
C507
1000p