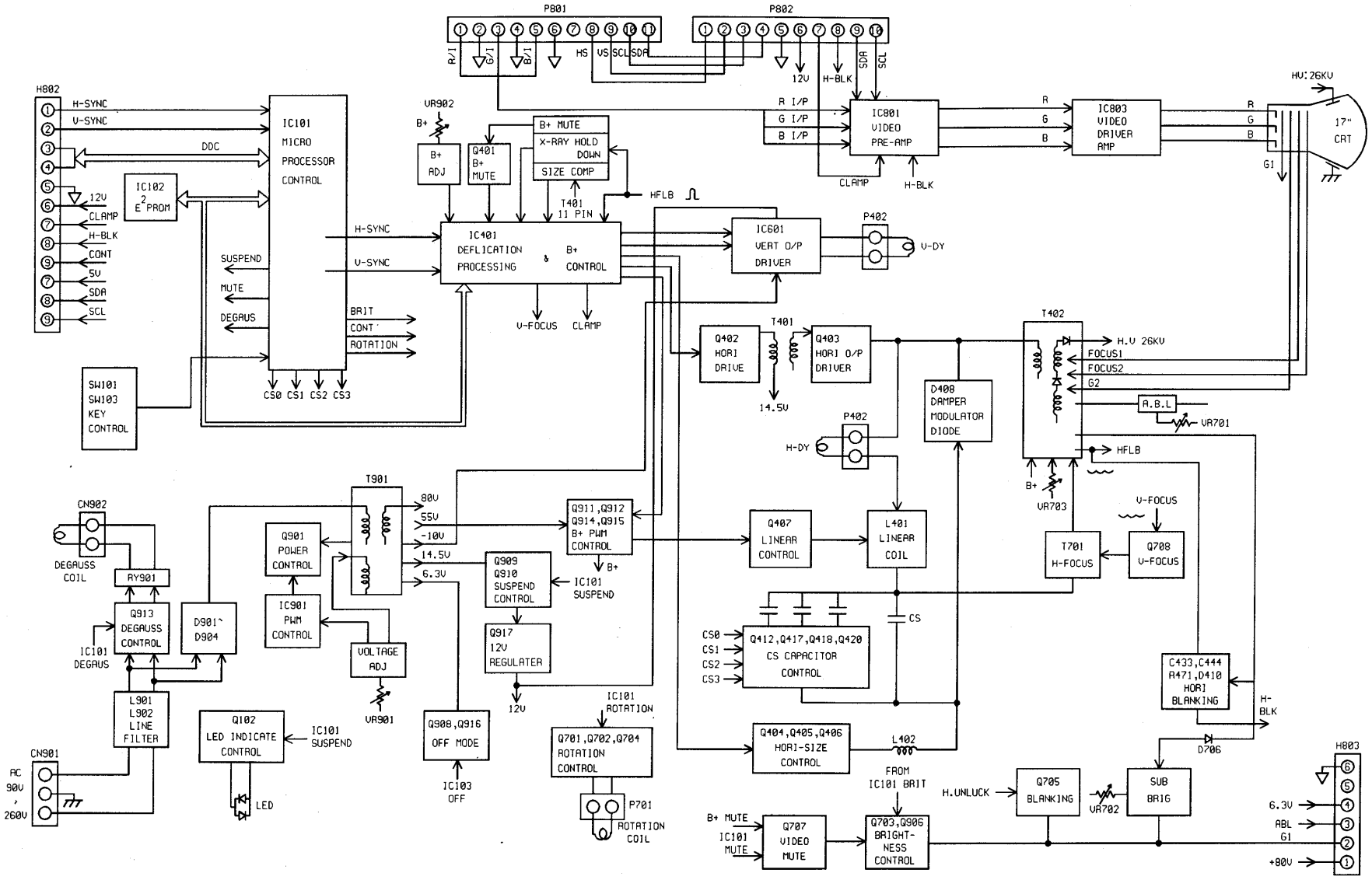
P801
P802
R/1
G/1
B/1
HS
VS
SCL
SDA
12V
H-BLK
H802
H-SYNC
V-SYNC
DDC
12V
CLAMP
H-BLK
CONT
5V
SDA
SCL
IC102
E2 PROM
IC101
MICRO
PROCESSOR
CONTROL
SUSPEND
MUTE
DEGAUS
BRIT
CONT
ROTATION
CS0 CS1 CS2 CS3
SW101
SW103
KEY
CONTROL
VR902
B+
B+
ADJ
Q401
B+
MUTE
B+ MUTE
X-RAY HOLD
DOWN
SIZE COMP
T401
11 PIN
HFLB
IC401
DEFLICATION
PROCESSING
&
B+
CONTROL
V-FOCUS
CLAMP
R I/P
G I/P
B I/P
IC801
VIDEO
PRE-AMP
CLAMP
H-BLK
R
G
B
IC803
VIDEO
DRIVER
AMP
HV:26KV
17"
CRT
G1
IC601
VERT O/P
DRIVER
P402
V-DY
Q402
HORI
DRIVE
T401
14.5V
Q403
HORI O/P
DRIVER
D408
DAMPER
MODULATOR
DIODE
T402
H.V 26KV
FOCUS1
FOCUS2
G2
A.B.L
VR701
HFLB
P402
H-DY
B+
VR703
V-FOCUS
T701
H-FOCUS
Q708
V-FOCUS
T901
80V
55V
-10V
14.5V
6.3V
Q911,Q912
Q914,Q915
B+ PWM
CONTROL
B+
Q909
Q910
SUSPEND
CONTROL
IC101
SUSPEND
Q917
12V
REGULATER
12V
Q407
LINEAR
CONTROL
L401
LINEAR
COIL
CS
Q412,Q417,Q418,Q420
CS CAPACITOR
CONTROL
CS0
CS1
CS2
CS3
C433,C444
R471,D410
HORI
BLANKING
H-
BLK
D706
Q404,Q405,Q406
HORI-SIZE
CONTROL
L402
FROM
IC101 BRIT
H.UNLUCK
Q705
BLANKING
VR702
SUB
BRIG
H803
6.3V
ABL
G1
+80V
CN902
DEGAUSS
COIL
RY901
Q913
DEGAUSS
CONTROL
IC101
DEGAUS
D901~
D904
Q901
POWER
CONTROL
IC901
PWM
CONTROL
VOLTAGE
ADJ
VR901
L901
L902
LINE
FILTER
CN901
AC
90V
~
260V
Q102
LED INDICATE
CONTROL
IC101
SUSPEND
LED
Q908,Q916
OFF MODE
IC103
OFF
IC101
ROTATION
Q701,Q702,Q704
ROTATION
CONTROL
P701
ROTATION
COIL
B+ MUTE
IC101
MUTE
Q707
VIDEO
MUTE
Q703,Q906
BRIGHT-
NESS
CONTROL