Revision	DATE	REASON / ECN No.	ENGINEER	APPROVED
01	18 SEP 03	ENGINEERING RELEASE	E.SMZ	M.FKI
02	29 SEP 03	CHANGE PIN ASSIGNMENT FOR J1	E.SMZ	
03	22 OCT 03	CHANGE CONNECTOR FROM CARBON CONTACT		

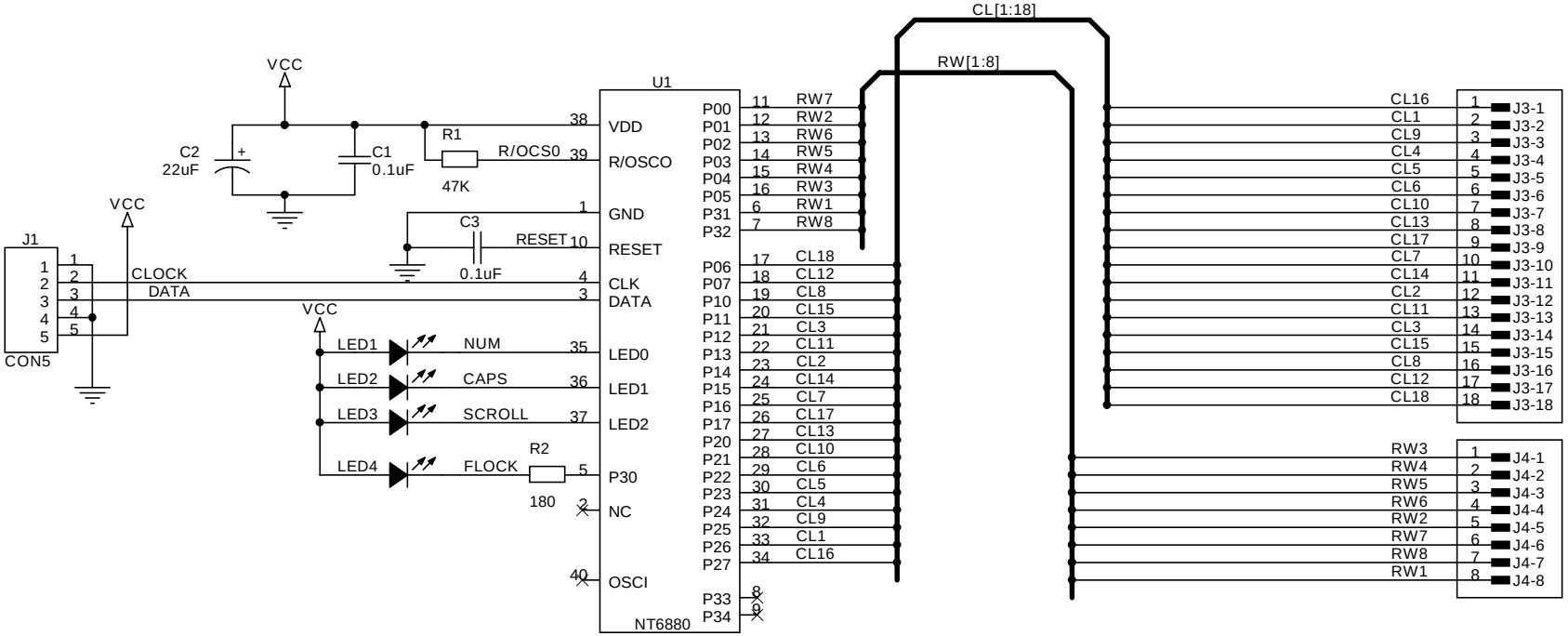

MINEBEA CO., LTD
MECHATRONICS DIVISION

Title
SCHEMATIC LTAS (ARES)

Document Number
131322

Rev
03

APPROVED : N.MIYAZAKI
DRAWN : E.SHIMIZU
Date: Wednesday, October 22, 2003
Sheet 1 of 1