SPECIFICATION

深圳市大显科技有限公司

Shenzhen Daxian Technology Co., Ltd.

中山悦辰 LoveSac Sofa BT 天线组件

Richsound LoveSac Sofa BT Antenna assembly

产 品 规 格 书

Product Specification

客 户 connection	中山悦辰 Richsound	频 段 frequency range	2400～2500MHz
项目名称 entry name	**LoveSac Sofa**	版 本 edition	V1.0
物料编号 Material No	**1S-8290X-004**	颜 色 Color	黑色 Black
客户料号 Customer Item Number	**101000663**		
R F 设计 R F Design	沈 川 Chuan.Shen	结构设计 Structural Design	周锐斌 RuiBin.Zhou
品质经理 Quality Manager	杨 进 Jin.Yang	技术总监 Technical Director	张 磊 Lei.Zhang
日 期 Date	2024-8-6		

客户确认：
Customer confirmation:

装配是否符合贵司要求：☐OK ☐NG
Whether the assembly meets your company's requirements：☐OK ☐NG

深圳市大显科技有限公司

深圳市龙岗区布吉镇吉华路 513 号上水径村（国防培训基地对面）达成工业园综合楼 7 楼
TEL:0755-28576002
FAX:0755-84276383

上海分部：上海市张江高科技园区集成电路产业区龙东大道 3000 号 8 号楼 201 室
TEL:021-61630552
FAX :755-84276383

Shenzhen DaXian Technology Co., Ltd.

Buji Town, Longgang District, Shenzhen, China Jihua Road 513, Shangshuijing Village (opposite the national defense training base) Dacheng Industrial Park, Building 7。
TEL:0755-28576002
FAX:0755-84276383

Room201, Building8, LongDongRoad3000#, Semiconductor Industry Park, ZhangJiang Hitech Zone, ShangHai
TEL:021-61630552
FAX:755-84276383

变更履历
Revision history

版本号 Version number	变更内容 Change content	变更理由 Reason for change	发起变更方 Originating Party	日期 Date	修改人 Modified by
V1.0	创建 found			2024-8-6	
V1.1					

Confidentiality requirements

Shenzhen Daxian Technology Co., Ltd. already possesses the information provided by the proprietary technology, which should be strictly confidential and not allowed to be disclosed to any person or company without the prior written consent of Shenzhen Daxian Technology Co., Ltd

索　引
Indexes

一、项目说明 Project Description.....4

二、 BT 天线 antenna.....4

1、 规格 specifications.....4

1.1 电气规格标准 Electrical specifications and standards.....5

1.1.1 电性能指标 Electrical performance index.....5

1.2 结构规格标准 Structural specifications and standards.....5

1.2.1 天线组成 Antenna composition.....5

2、测试环境 testing environment.....6

3、测试 test.....7

3.1 驻波(VSWR)的测试 Test of standing wave (VSWR).....7

3.1.1 测试连接 Test connection.....7

3.2 效率、功率（TRP）、灵敏度（TIS）的测试 Testing of efficiency, power (TRP), sensitivity (TIS).....7

3.2.1 测试的场地 Test site.....7

3.2.2 测试的仪表 Tested Instruments.....7

3.2.3 测试数据 test data.....7-8

4、VSWR 参数图 Parameter diagram.....8

5、天线隔离度 Antenna isolation.....9

6、无源场型图 Passive field pattern diagram.....10

8、外场测试 Field Test.....11

9、户外拉距测试 Outdoor Pull distance test.....12

10、哈曼 RF 衰减测试数据 Harman RF attenuation test data.....12

11、结论 conclusion.....12

三、工程图 schedule drawing.....13

四、样品测试报告 Sample Test Report.....14

五、CPK 尺寸报告 CPK Dimensional Report.....15

六、盐雾试验报告 Salt Spray Test Report.....16

七、包装图 Package Drawing.....17

www.Topant.com.cn

Confidentiality requirements

Shenzhen Daxian Technology Co., Ltd. already possesses the information provided by the proprietary technology, which should be strictly confidential and not allowed to be disclosed to any person or company without the prior written consent of Shenzhen Daxian Technology Co., Ltd

一 项目说明 Project Description

客 户 名： **Customer Name：**	中山悦辰 Richsound
整机类型： **Type of complete machine：**	音箱 loudspeaker box
天线频段： **Antenna band：**	2400 ~ 2500MHz
天线形式： **Antenna form：**	FPC+同轴线+线材海绵 FPC+coaxial line+wire sponge
馈电形式： **Feed form：**	焊接 weld
馈脚数量： **Number of feed legs：**	两个 Two
硬件版本： **Hardware version：**	/

二 BT 天线组件 Antenna assembly

1 规格 specifications

本报告主要提供 LoveSac Sofa项目天线的各项电气和结构性能参数的测试状况。下图为大显设计的天线图片。

This report mainly provides the testing status of various electrical and structural performance parameters of the antenna for the LoveSac Sofa project The following image shows an antenna with a large display design.

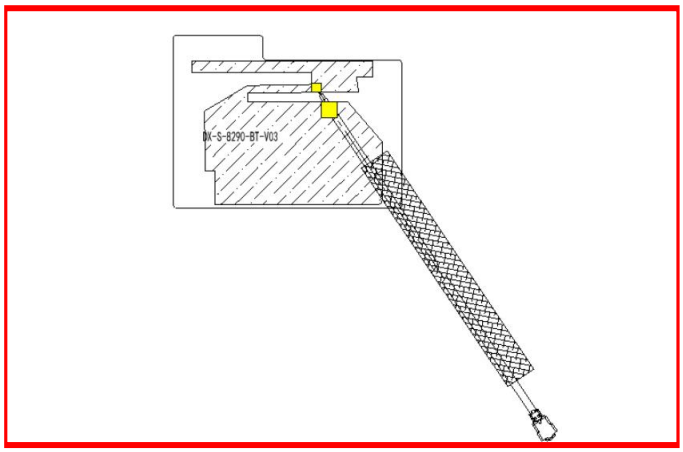

天线外观图

antenna appearing diagram

Confidentiality requirements

Shenzhen Daxian Technology Co., Ltd. already possesses the information provided by the proprietary technology, which should be strictly confidential and not allowed to be disclosed to any person or company without the prior written consent of Shenzhen Daxian Technology Co., Ltd

1.1 电气规格标准 Electrical specifications and standards

1.1.1 电性能指标 Electrical performance index

天线工作频段在 **2400 ~ 2500 MHz。** 下表是大显设计和量产天线的电性能的指标.

The operating frequency band of the antenna is between 2400 and 2500 MHz. The following table shows the electrical performance indicators of large display design and mass production antennas.

Frequency Range	Frequency (MHz)	VSWR
BT	**2400 ~ 2500**	**≤ 2**

2 结构规格标准 Structural specifications and standards

1.2.1 天线组成 Antenna composition

天线主要是由 FPC+同轴线+线材海绵 组成。

The antenna is mainly composed of FPC+coaxial line+wire sponge.

Confidentiality requirements

Shenzhen Daxian Technology Co., Ltd. already possesses the information provided by the proprietary technology, which should be strictly confidential and not allowed to be disclosed to any person or company without the prior written consent of Shenzhen Daxian Technology Co., Ltd

2、 测试设备 The Equipment of Active Test

Satimo 3D Chamber　6×4×4（ m ）

Agilent 8960 E5515c

Network analyzer-R&S ZVL

图 2

Figure 2

Confidentiality requirements

Shenzhen Daxian Technology Co., Ltd. already possesses the information provided by the proprietary technology, which should be strictly confidential and not allowed to be disclosed to any person or company without the prior written consent of Shenzhen Daxian Technology Co., Ltd

3 测试 test

3.1 驻波(VSWR)的测试 Test of standing wave (VSWR)

3.1.1 测试连接：VSWR 测试装置依次的连接为：R&S ZVL 网络分析仪→测试线→测试治

Test connection: The VSWR test device is sequentially connected as follows: R&S ZVL network analyzer → test line → test fixture

实测(附图)Actual measurement (attached drawing)

3.2 增益及效率、功率（TRP）、灵敏度（TIS）的测试

Gain and efficiency, power (TRP), sensitivity (TIS) testing

3.2.1 测试的场地 Test site：

大显微波暗室 。测试频率范围为 400MHz—6GHz，静区范围为 50cm 周圆，反射率小于-50 dB。

Large display microwave anechoic chamber. The test frequency range is 400MHz - 6GHz, the static zone range is 50cm circumferential, and the reflectivity is less than - 50dB.

3.2.2 测试的仪表 Tested Instruments：

R&S ZVL 网络分析仪、Agilent8960 E5515C、标准喇叭天线、法国 SATIMO-SG24SYSTEM 系统、打印机等。

R&S ZVL network analyzer, Agilent 8960 E5515C, standard horn antenna, French SATIMO-SG24SYSTEM system, printer, etc.

3.2.3 测试数据 ：在微波暗室中，测试的功率和灵敏度相关的数值如下表

Test data: In a microwave anechoic chamber, the values related to the power and sensitivity tested are shown in the table bel

OTA 有源测试 OTA Active Test：

Band	CH	TPR	TIS
BT	0	6.53	-86.22
	39	6.67	-86.86
	78	6.25	-86.48

Confidentiality requirements

Shenzhen Daxian Technology Co., Ltd. already possesses the information provided by the proprietary technology, which should be strictly confidential and not allowed to be disclosed to any person or company without the prior written consent of Shenzhen Daxian Technology Co., Ltd

无源效率&增益 Passive efficiency&gain：

Freq (MHz)	Effi (%)	Effi (dB)	Gain (dBi)
2400	48. 24	-3. 17	1. 77
2410	48. 49	-3. 14	1. 89
2420	48. 97	-3. 10	1. 63
2430	49. 16	-3. 08	1. 59
2440	49. 38	-3. 06	1. 74
2450	49. 64	-3. 04	1. 93
2460	49. 77	-3. 03	1. 81
2470	49. 24	-3. 08	1. 69
2480	48. 76	-3. 12	1. 72
2490	48. 45	-3. 15	1. 53
2500	48. 11	-3. 18	1. 67

4、VSWR 参数图 VSWR parameter diagram

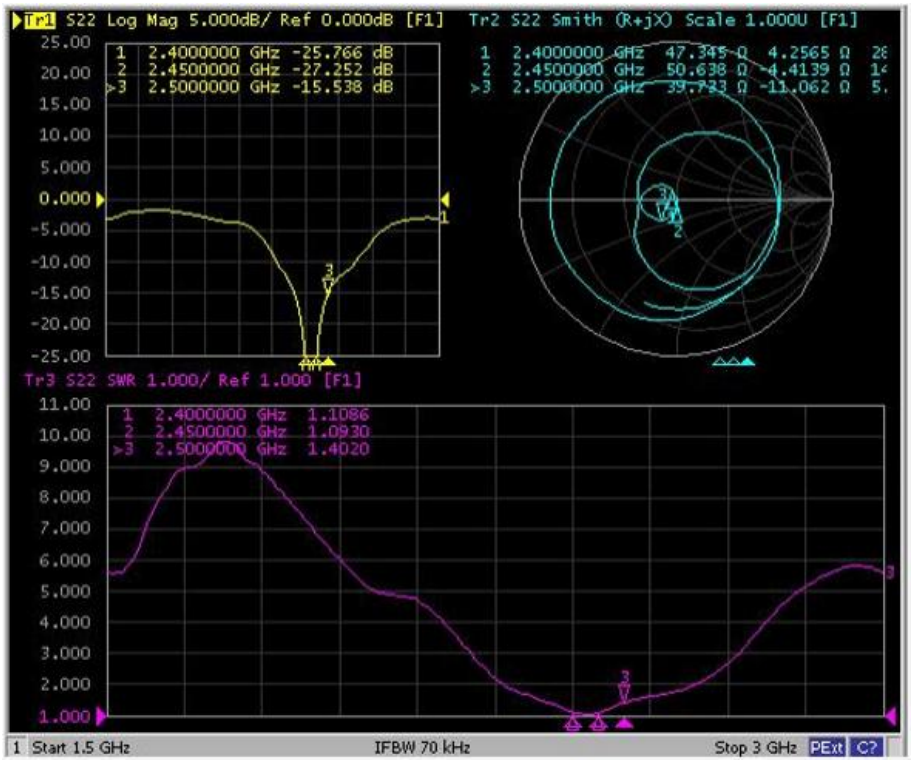

Confidentiality requirements

Shenzhen Daxian Technology Co., Ltd. already possesses the information provided by the proprietary technology, which should be strictly confidential and not allowed to be disclosed to any person or company without the prior written consent of Shenzhen Daxian Technology Co., Ltd

5、天线隔离度 Antenna isolation

WIFI 0 和 BT

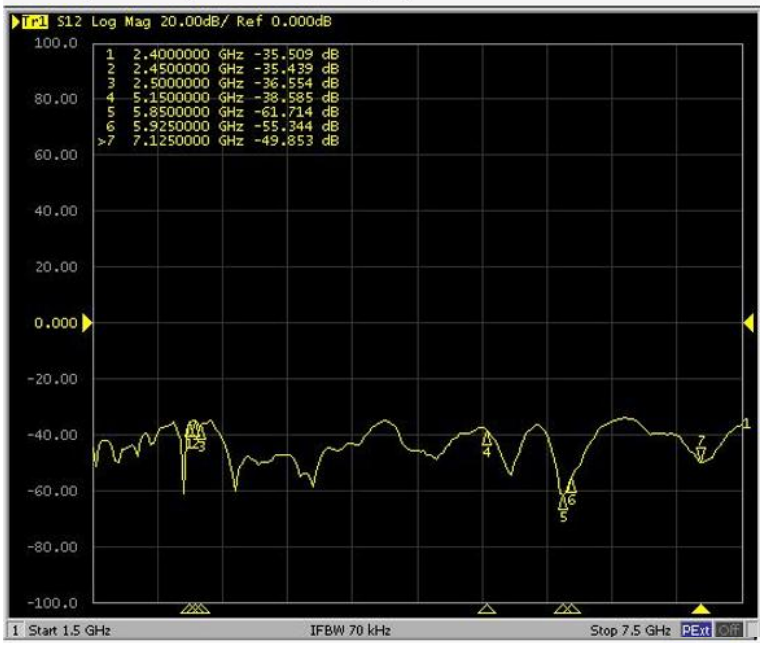

WIFI 0 和 WIFI 1

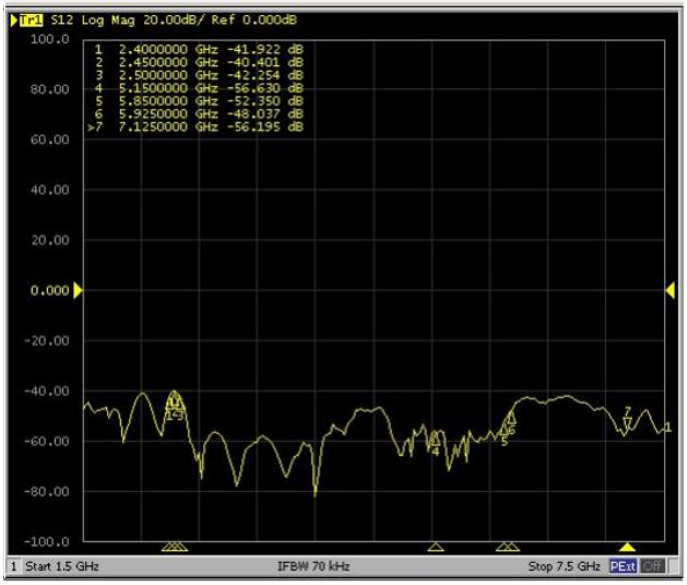

BT 和 WIFI 1

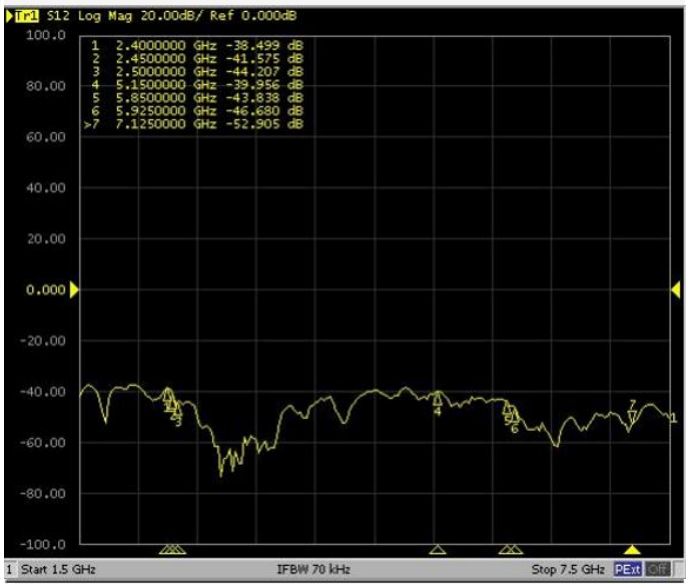

Confidentiality requirements

Shenzhen Daxian Technology Co., Ltd. already possesses the information provided by the proprietary technology, which should be strictly confidential and not allowed to be disclosed to any person or company without the prior written consent of Shenzhen Daxian Technology Co., Ltd

6、无源场型图-2450MHz

Passive Field Pattern Diagram - 2450MHz

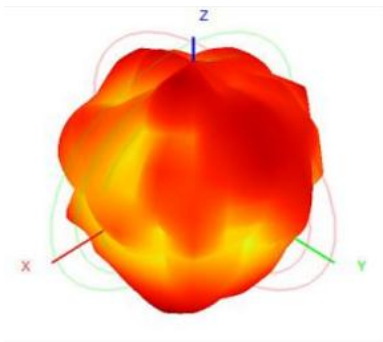

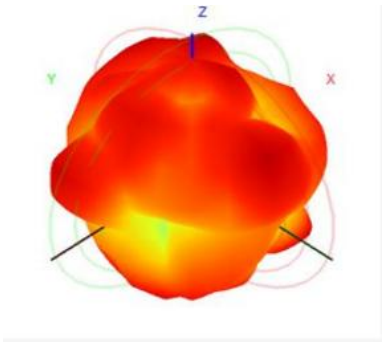

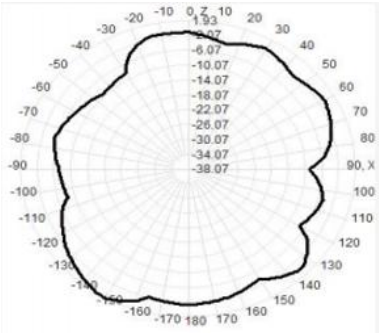

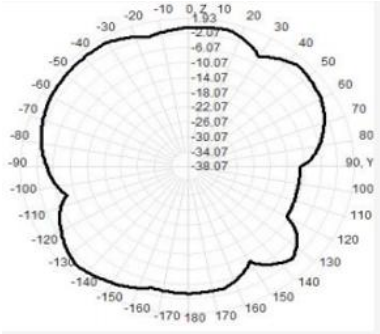

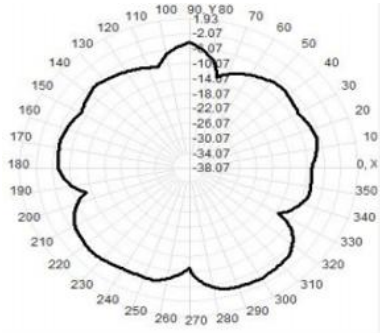

Confidentiality requirements

Shenzhen Daxian Technology Co., Ltd. already possesses the information provided by the proprietary technology, which should be strictly confidential and not allowed to be disclosed to any person or company without the prior written consent of Shenzhen Daxian Technology Co., Ltd

7、外场测试 field test

测试时间Test Time：2023/05/19

测试场地：深圳烟草公司附近

Testing site: near Shenzhen Tobacco Company

测试手机test mobile：Iphone 14 Pro

配网手机Distribution phone：XiaoMi MIX2

配网Distribution Network APP：HK ONE

测试路由器Test Router：ASUS-RT-AC86U

Confidentiality requirements

Shenzhen Daxian Technology Co., Ltd. already possesses the information provided by the proprietary technology, which should be strictly confidential and not allowed to be disclosed to any person or company without the prior written consent of Shenzhen Daxian Technology Co., Ltd

8、户外拉距测试 Outdoor pull distance test

测试方向 Test direction	前 Front	后 Behind	左 Left	右 Right
	测试距离 Test distance			
BT	100m	100m	100m	100m
WIFI 2.4G	200m	200m	200m	200m
WIFI 5.8G	255m	255m	255m	255m

9、哈曼 RF 衰减测试数据 Harman RF attenuation test data

机器方向面 Machine direction plane	BT	WIFI 2.4G	WIFI 5.8G
前Front	27 db	27 db	25 db
左Left	28 db	29 db	26 db
后Behind	28 db	29 db	25 db
右Right	27 db	27 db	25 db

10、结论 conclusion

此天线是在客户提供样机基础上设计，电参数和结构性能已达到技术要求，请确认！

This antenna is designed based on the prototype provided by the customer. The electrical parameters and structural performance have met the technical requirements, please confirm!

Confidentiality requirements

Shenzhen Daxian Technology Co., Ltd. already possesses the information provided by the proprietary technology, which should be strictly confidential and not allowed to be disclosed to any person or company without the prior written consent of Shenzhen Daxian Technology Co., Ltd

	0~10	10~30	30~50	50~	角度	○	◎	⊥	▱
	0.05	0.10	0.15	0.20	1°	0.02	0.02	0.03	0.05

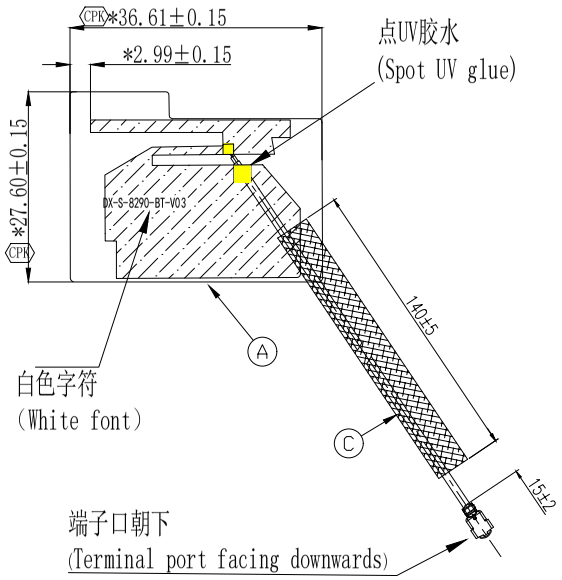

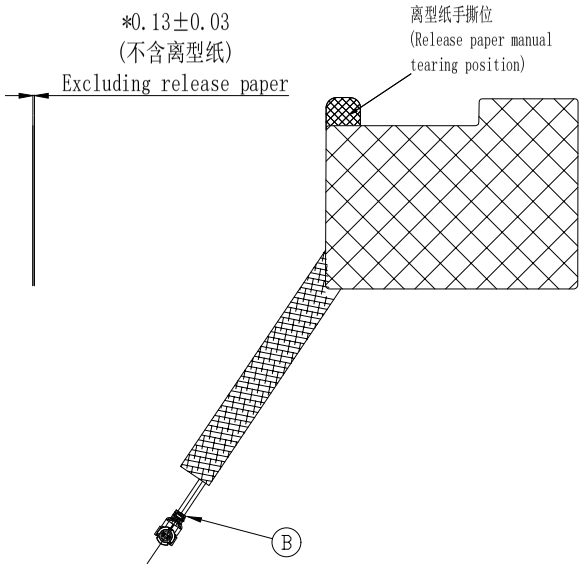

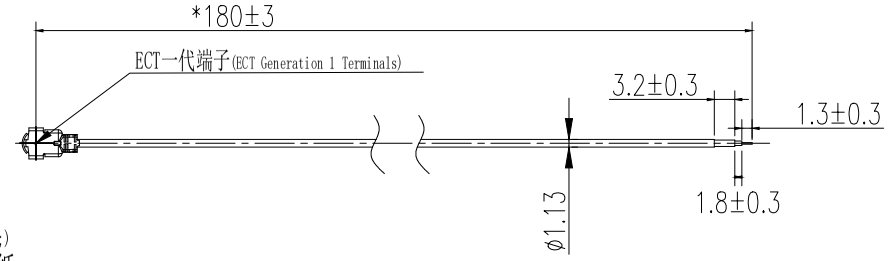

技术要求:
(technical requirement:)

1. "*"为重点尺寸 ;
(1. "*" is the key dimension;)
2. 未标注尺寸请依图纸;
(2. Please refer to the drawing for unspecified dimensions;)
3. 不可有虚焊、漏焊、短线、断线等操作不良;
(3. There should be no poor operation such as faulty soldering, missing soldering, short wires, broken wires, etc;)
4. 符合 RoHS 要求 .
(4. Meet RoHS requirements.)

序号(serial number)	零件名称(Part Name)	材质(material)	颜色(colour)	备注(Note)
C	线材海绵(Cable sponge)	PUF	黑色(black)	
B	端子同轴线(RF connector)	Cable	蓝色(blue)	
A	FPC	Electrolytic copper PI	黑色(black)	

版 本(edition)	描述(describe)	日期(date)	备注(Note)
A	首次发行(Initial Issue)	2024.08.1	

TOPANT

深 圳 大 显 科 技 有 限 公 司
Shenzhen Topant Technology Co., Ltd.

机型(Machine model)	LoveSac Sofa	产品颜色(Product Color)	黑色(black)	日期(date)	2024/08/1
项目编码(Project Code)	CS-8290X-004	模面处理(Mold surface treatment)	NA	结构(MD)	周锐斌
零件名称(Part Name)	BT天线(BT antenna)	单位(unit) mm	比例(scale) 1:1	射频(RF)	沈川
零件编码(Part Number)	1S-8290X-004	第三视角 (Third perspective)		审核(check)	吴锡欢
材质(material)	FPC+sponge+RF connector			批准(ratify)	张磊
保存路径(Save Path)				当前版本(current version)	A

深圳市大显科技有限公司

样品测试报告

送样单位:工程　　2024年8月1日

品　名	BT天线	批　量	4pcs	类别	□模具零件　□材料评估
料　号	1S-8290X-004	模穴数	——		■送样评估　□其他

序号	图面规格	量具	测试结果								超差值	判定	
			1	2	3	4	5	6	7	8		OK	NG
1	36.61±0.15	P	36.65	36.60	36.58	36.56					0	√	
2	2.99±0.15	P	3.02	3.00	2.96	2.99					0	√	
3	27.60±0.15	P	27.62	27.60	27.58	27.56					0	√	
4	0.13±0.03	P	0.13	0.14	0.13	0.12					0	√	
5	140±5	P	140.00	141.00	140.00	142.00					0	√	
6	15±2	P	15.00	15.02	16.00	15.00					0	√	
7	180±3	P	180.00	182.00	180.00	181.00					0	√	
8	3.2±0.30	P	3.25	3.22	3.20	3.16					0	√	
9	1.3±0.30	P	1.35	1.30	1.27	1.29					0	√	
10	1.8±0.30	P	1.82	1.80	1.77	1.79					0	√	

量具	目视 E　卡尺 C　千分尺 M　投影仪 P　螺纹规 Pg	最终判定	
代号	网络分析仪 Ne　扭力计 G　万用表 Me　直　尺 F	OK	NG
备注：	外观OK.		

表单编号：QR/RD-P01-08

核准:杨进　　作成：李朝花

Shenzhen Topant Technology Co.,Ltd.

1. Basic information:

Product Name: BT天线

Product no.: 1S-8290X-004

Sample size : 30 pcs

Control paramete SIZP

2、Data measurement:

Test date: 1/Aug/24

NO. / ITEM	NO.1	NO.2	NO.3	NO.4	NO.5		
spec	36.61±0.15mm	27.60±0.15mm	2.99±0.15mm	0.13±0.03mm	180±3mm		
USL	36.76	27.75	3.14	0.16	183		
LSL	36.46	27.45	2.84	0.10	177.00		
μ	36.61	27.60	2.99	0.13	180.00		
MAX	36.660	27.640	3.050	0.140	181.000		
MIN	36.550	27.540	2.950	0.120	179.000		
1	36.65	27.62	3.02	0.13	180.05		
2	36.61	27.60	3.05	0.12	181.00		
3	36.58	27.58	3.00	0.13	180.00		
4	36.55	27.59	2.96	0.14	180.52		
5	36.59	27.64	2.99	0.13	180.04		
6	36.64	27.63	2.95	0.13	180.09		
7	36.62	27.60	2.97	0.12	180.12		
8	36.60	27.57	3.03	0.13	180.17		
9	36.66	27.56	3.00	0.14	181.00		
10	36.62	27.54	3.04	0.13	179.00		
11	36.65	27.62	3.02	0.13	180.05		
12	36.61	27.60	3.05	0.12	181.00		
13	36.58	27.58	3.00	0.13	180.00		
14	36.55	27.59	2.96	0.14	180.52		
15	36.59	27.64	2.99	0.13	180.04		
16	36.64	27.63	2.95	0.13	180.09		
17	36.62	27.60	2.97	0.12	180.12		
18	36.60	27.57	3.03	0.13	180.17		
19	36.66	27.56	3.00	0.14	181.00		
20	36.62	27.54	3.04	0.13	179.00		
21	36.65	27.62	3.02	0.13	180.05		
22	36.61	27.60	3.05	0.12	181.00		
23	36.58	27.58	3.00	0.13	180.00		
24	36.55	27.59	2.96	0.14	180.52		
25	36.59	27.64	2.99	0.13	180.04		
26	36.64	27.63	2.95	0.13	180.09		
27	36.62	27.60	2.97	0.12	181.00		
28	36.60	27.57	3.03	0.13	180.17		
29	36.66	27.56	3.00	0.14	181.00		
30	36.62	27.54	3.04	0.13	179.00		

3、Data calculation:

No.	No.1	No.2	No.3	No.4	No.5		
Average	36.612	27.593	3.001	0.130	180.228		
σ	0.03	0.03	0.03	0.01	0.57		
Ca	0.01	0.05	0.07	0.00	0.08		
Cp	1.54	1.64	1.52	1.55	1.76		
CPK	1.52	1.56	1.41	1.55	1.62		

4. Conclusion:

THE CAPABILITY OF PROCESS IS PERFECT STATE, MAINTAIN ACTUALITY.

Approved：杨进

Designed：李朝花

深圳市大显科技有限公司

盐水喷雾试验记录表

编号：QR/QC-WI09-01版本B

试验时间：2024年8月1日13:00 至8月1日13:00　　共计 48 小时					
（喷雾时间）试验若有中断，其原因为：					
☑盐水试验法：试验室温度35℃，饱和空气桶温度47℃ ☐腐蚀试验法：试验室温度35℃，饱和空气桶温度47℃					
1.氯化钠品质	*99.50%*	2.纯净水品质		*纯净水*	
3.喷雾采取PH值	*雾化前6.5~7.2*	4.试验液PH值		*6.0*	
5.压力表	*1.0* Kgf/cm	6.试验室相对湿度		*30%*	
7.试验室温度	*35* ℃	8.压力桶温度		*47* ℃	
9.盐水浓度	*5±0.1* %	10.其他			

供应商名称	产品品名	试样数量	试验样品	试验结果	判定依据
大显	BT 天线	*2PCS*	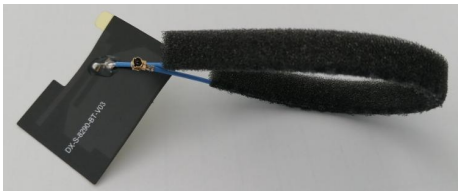 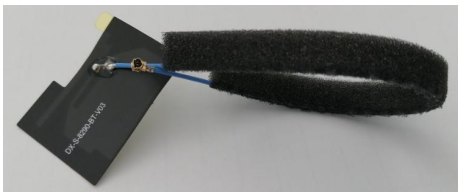	*合格*	依GB6461-2002标准 等级Ra9

判定：　1.依标准样品判定　　2.依GB6461-2002标准判定

　　3.依不良限度样品判定　　4.依其他方法判定

备注：试验结束后,如果试样状态允许,可不经清洗进行检查。如果污垢和盐类沉积物等掩盖了缺陷而使检查难以进行时,宜用蘸有中性肥皂液的海绵对表面进行擦拭，然后用水漂洗。但在此过程中不应施加压力，以免洗掉腐蚀产物而造成评级偏高。清洗液不应对覆盖层产生任何破坏。中途或定期检查时不允试清洗试样，否则影响测试结果

审核：**杨进**　　测试员：　李朝花

深圳市大显科技有限公司

Shenzhen Daxian Technology Co., Ltd

包装运输存储说明

一、包装规范

1 .FPC+同轴线+线材海绵：

2、装袋，每袋装 50pcs;每 500pcs 装 1pcs 纸箱（根据订单数量可调整）.

每 10 小袋装入 1pcs 纸箱

所附图片仅供参照，以实物为准。

3、 装箱,纸箱规格：390*305*335，打包后装箱密封，贴标签。

二、运输要求：

产品包装件运输时，应防潮、防破损、防污染。

三、存储要求：

产品包装件应在仓库内堆放，库房应干燥、通风、清洁。