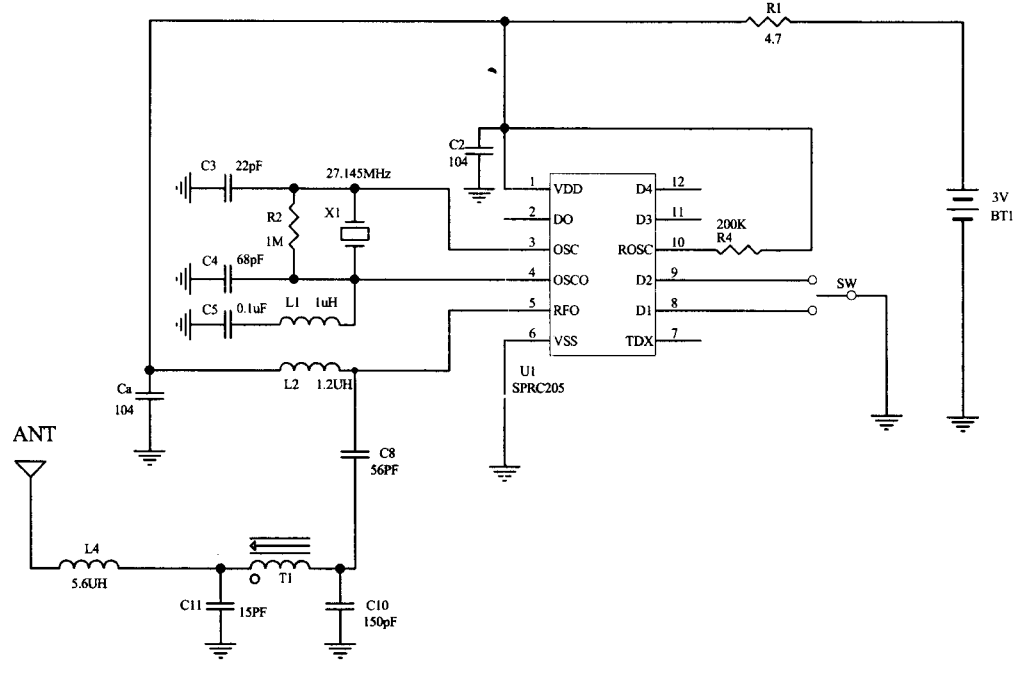

Title	SCANNON AND SCOOCH		
Size A4	Number b7458-tx		Revision
Date: 24-Mar-2003		Sheet of	
File: D:\ixpan\b7458\EP1\SCH\TX-1.sch		Drawn By:	