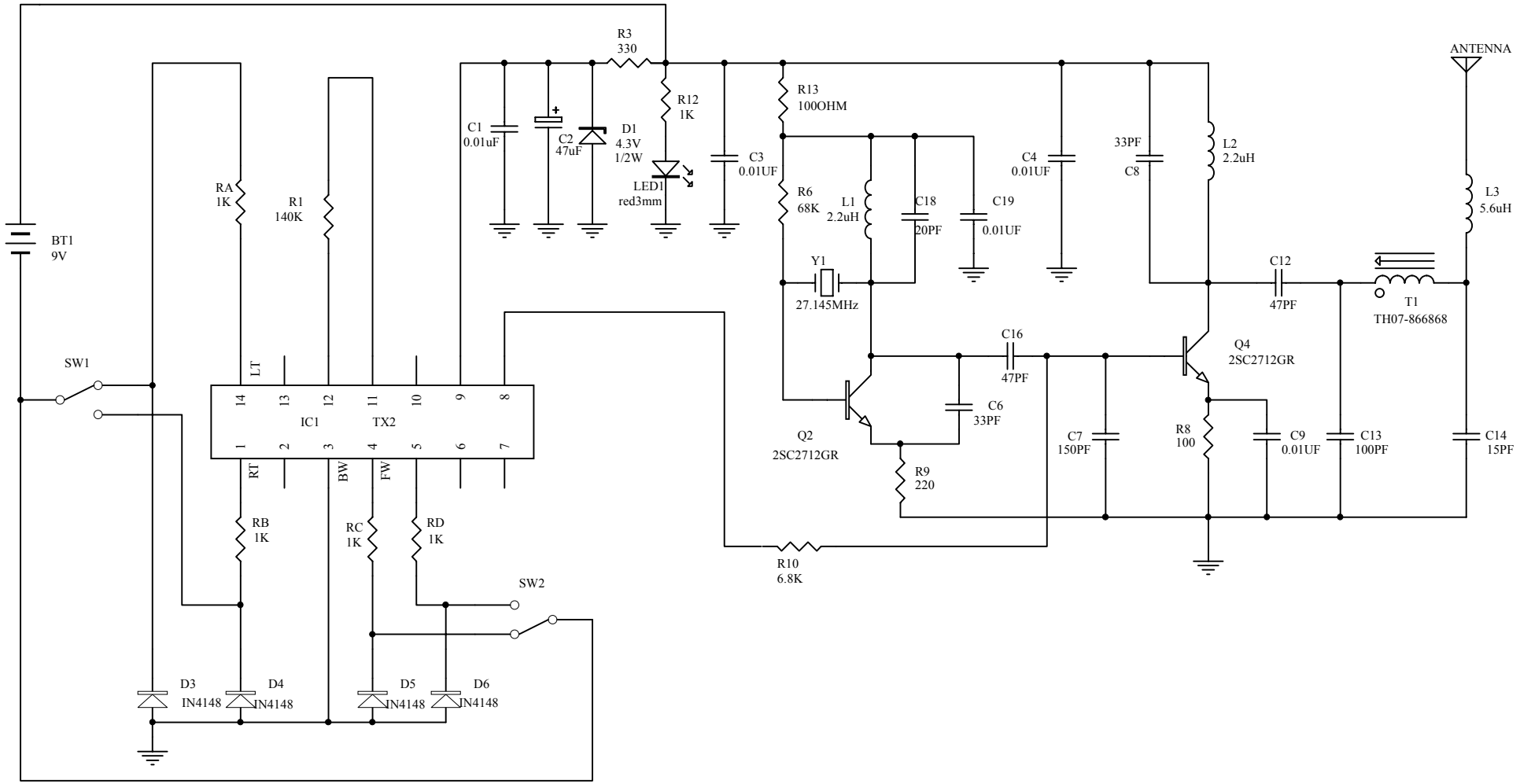


| | | |
|---|---|---|
| Title | ROBOT SHOWDOWN | |
| Size A4 | Number 91556 | Revision 01 |
| Date: 11-Mar-2002 | Sheet 1 of 1 | |
| File: \\Kpe01\e\ly-91556-fcc\sch\TX-FCC.sch | Drawn By: JETTA HBEE | |