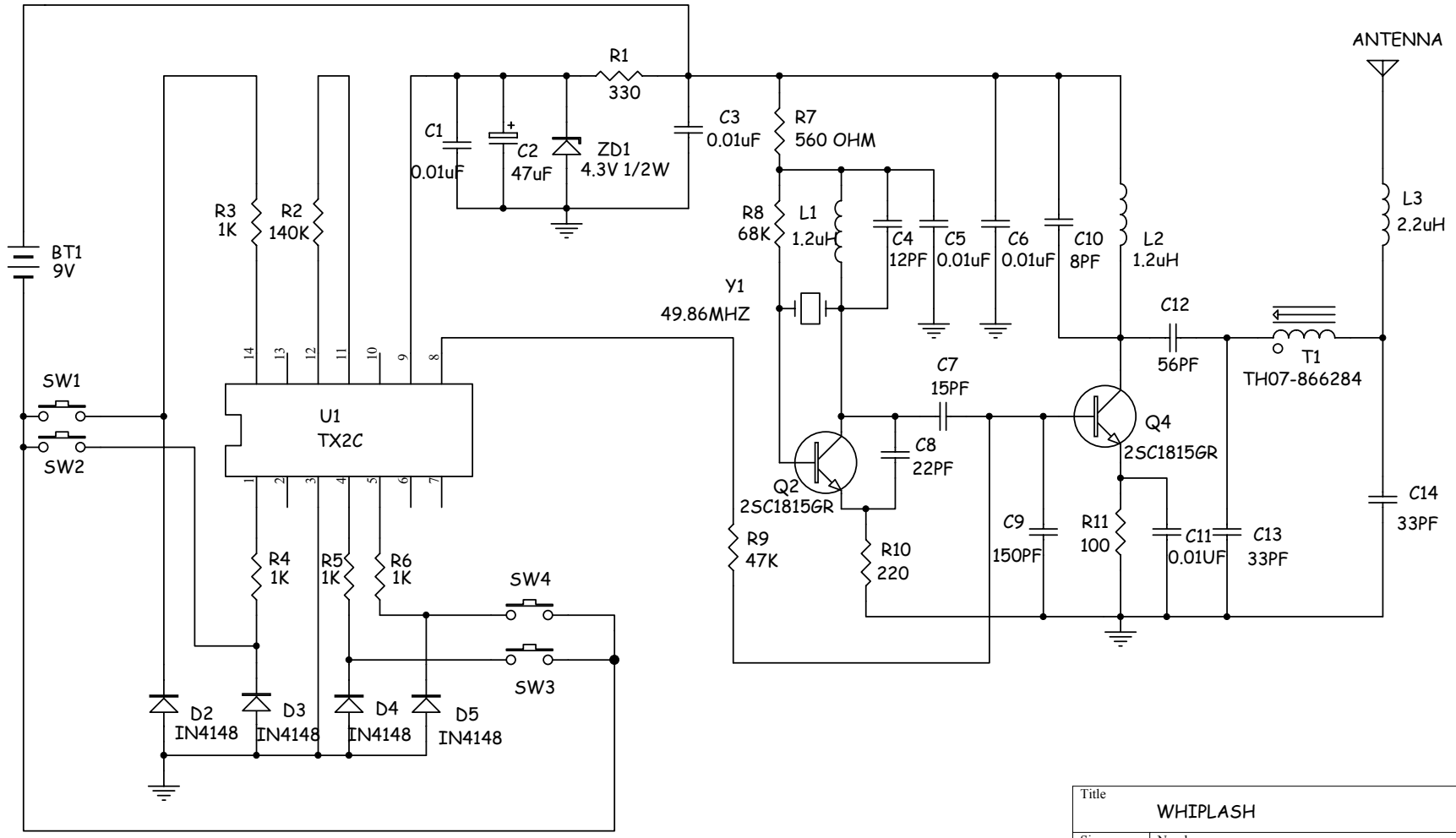

Title	WHIPLASH	
Size A4	Number 91497 transmitter(49MHZ)	Revision FCC (02)
Date: 25-Jul-2002	Sheet 1 of 1	
File: \\..\TX-49M-FCC02.sch	Drawn By: ly	