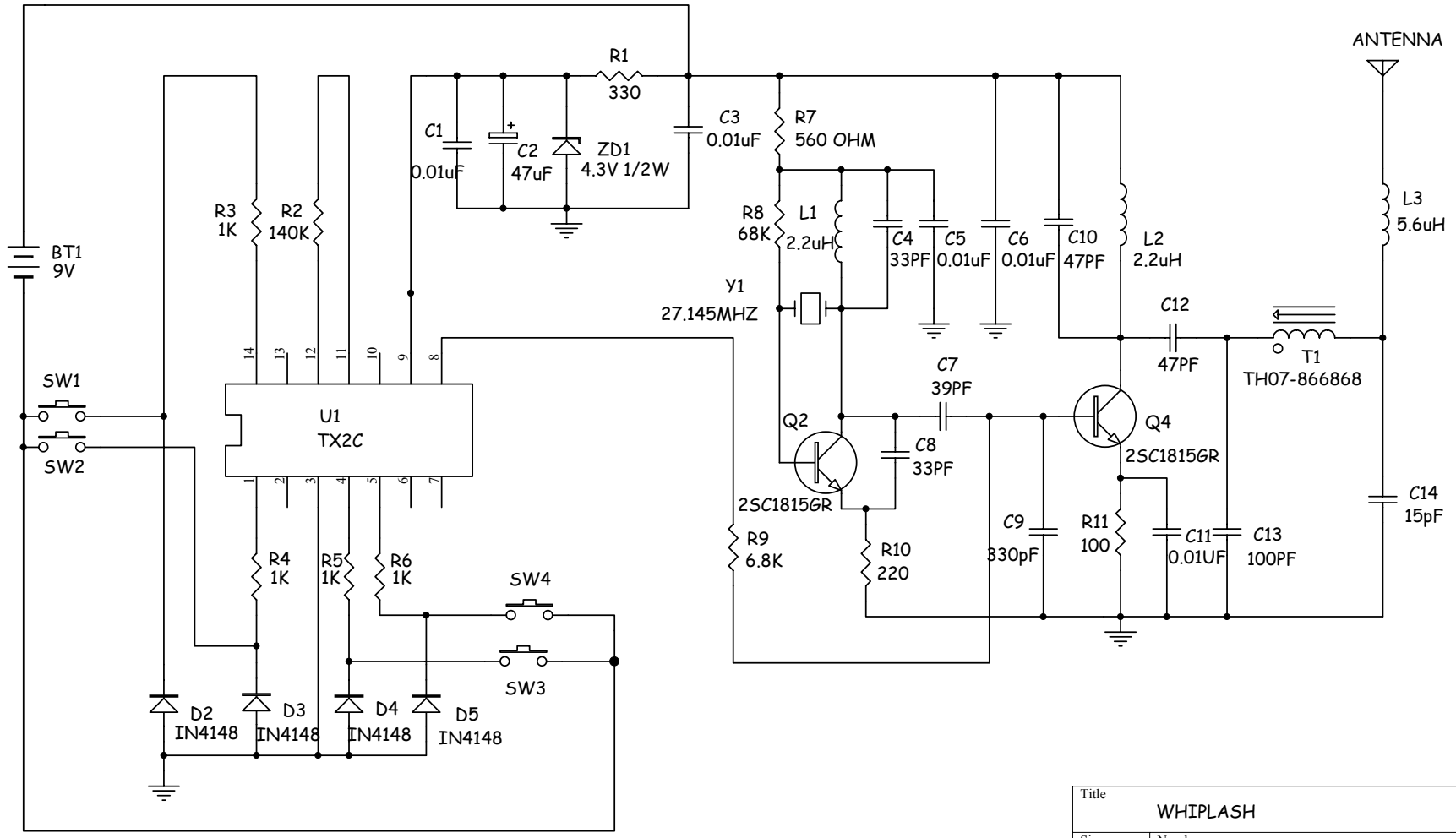

Title	WHIPLASH		
Size A4	Number 91496 transmitter(27MHZ)		Revision FCC (02)
Date: 30-Jul-2002		Sheet 1 of 1	
File: \\..\TX-27M-FCC02.sch		Drawn By: ly	