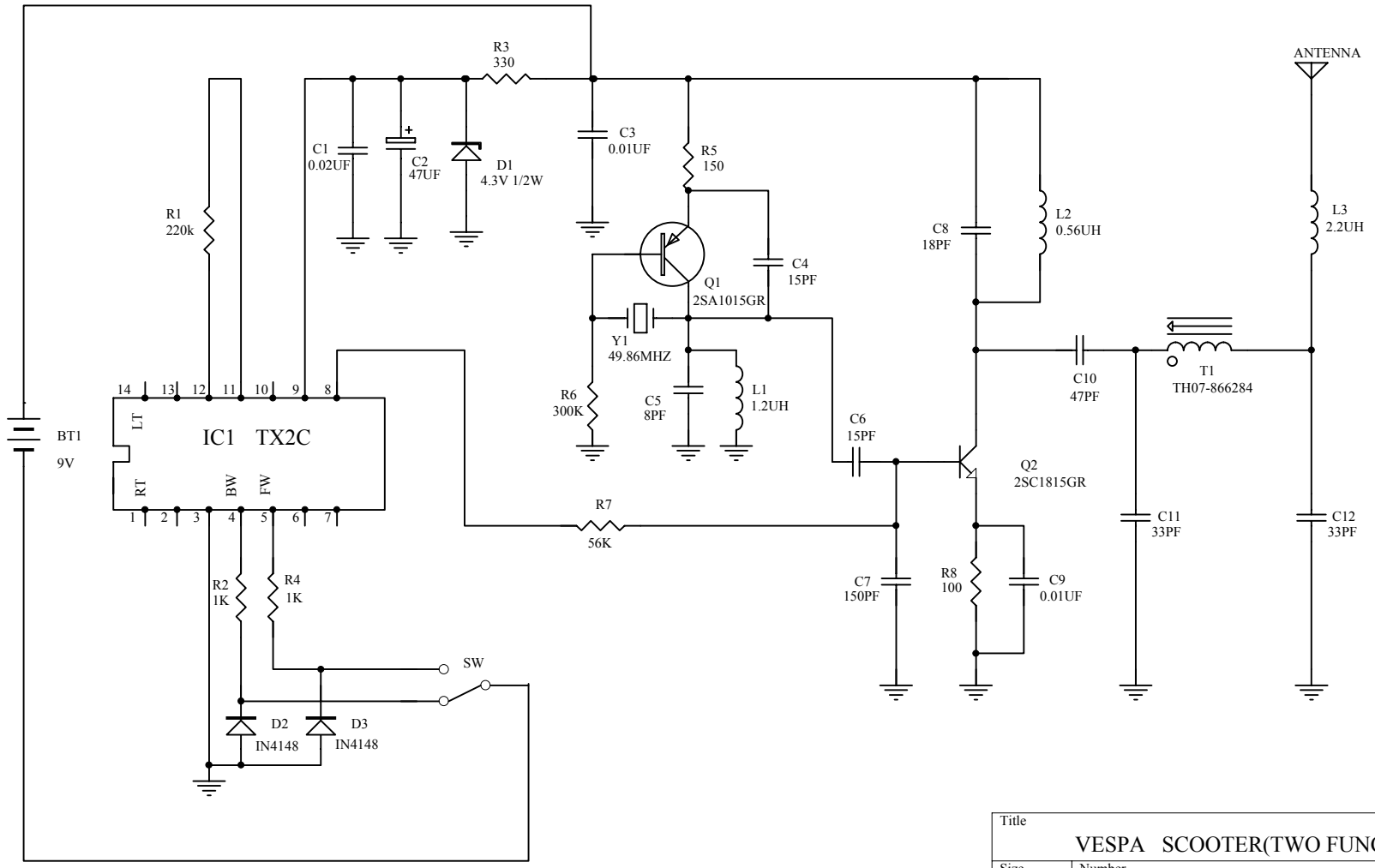

Title	VESPA SCOOTER(TWO FUNCTION)	
Size A4	Number 55647TX-1	Revision 00
Date: 6-Mar-2002		Sheet 1 of 1
File: A:\55647TX-1.sch		Drawn By: JETTA HBEE