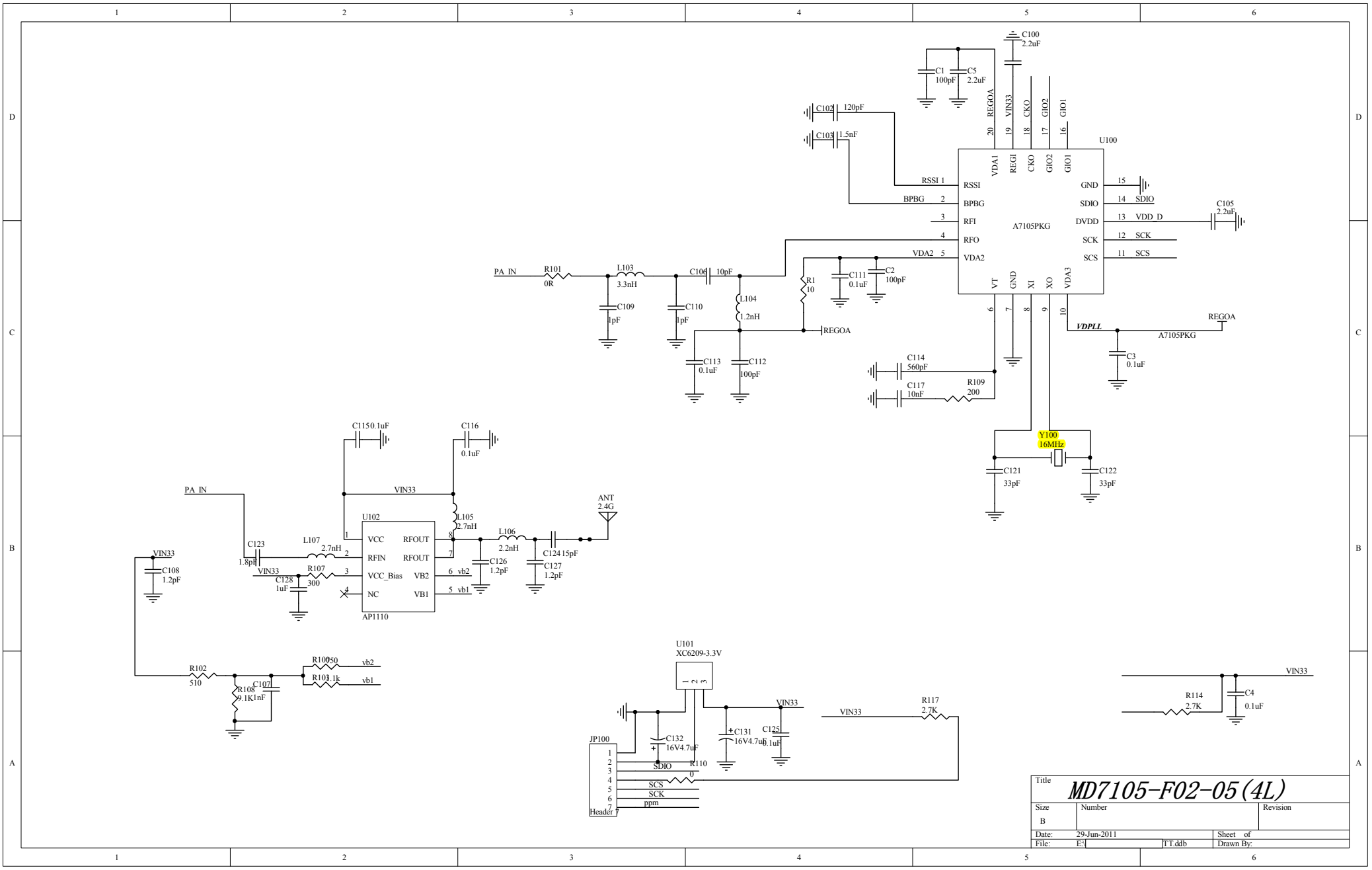
U100
A7105PKG
RSSI
BPBG
RFI
RFO
VDA2
VDA1
REGI
CKO
GIO2
GIO1
GND
SDIO
DVDD
SCK
SCS
VT
XI
XO
VDA3
VDD_D
VDPLL
REGOA
VIN33
C100 2.2uF
C1 100pF
C5 2.2uF
C102 120pF
C103 1.5nF
C105 2.2uF
C3 0.1uF
C111 0.1uF
C2 100pF
R1 10
C114 560pF
C117 10nF
R109 200
Y100 16MHz
C121 33pF
C122 33pF
PA_IN
R101 0R
L103 3.3nH
C106 10pF
C109 1pF
C110 1pF
L104 1.2nH
C113 0.1uF
C112 100pF
C115 0.1uF
C116 0.1uF
U102
AP1110
VCC
RFIN
VCC_Bias
NC
RFOUT
VB2
VB1
vb2
vb1
L105 2.7nH
L106 2.2nH
C124 15pF
C126 1.2pF
C127 1.2pF
ANT 2.4G
C123 1.8pF
L107 2.7nH
R107 300
C128 1uF
C108 1.2pF
R102 510
R108 9.1K
C107 1nF
R100 50
R103 3.1k
U101 XC6209-3.3V
C132 16V4.7uF
C131 16V4.7uF
C125 0.1uF
R110 0
R117 2.7K
JP100
Header 7
SDIO
SCS
SCK
ppm
R114 2.7K
C4 0.1uF
Title
MD7105-F02-05(4L)
Size
B
Number
Revision
Date: 29-Jun-2011
Sheet of
File: E:\ T.ddb
Drawn By: