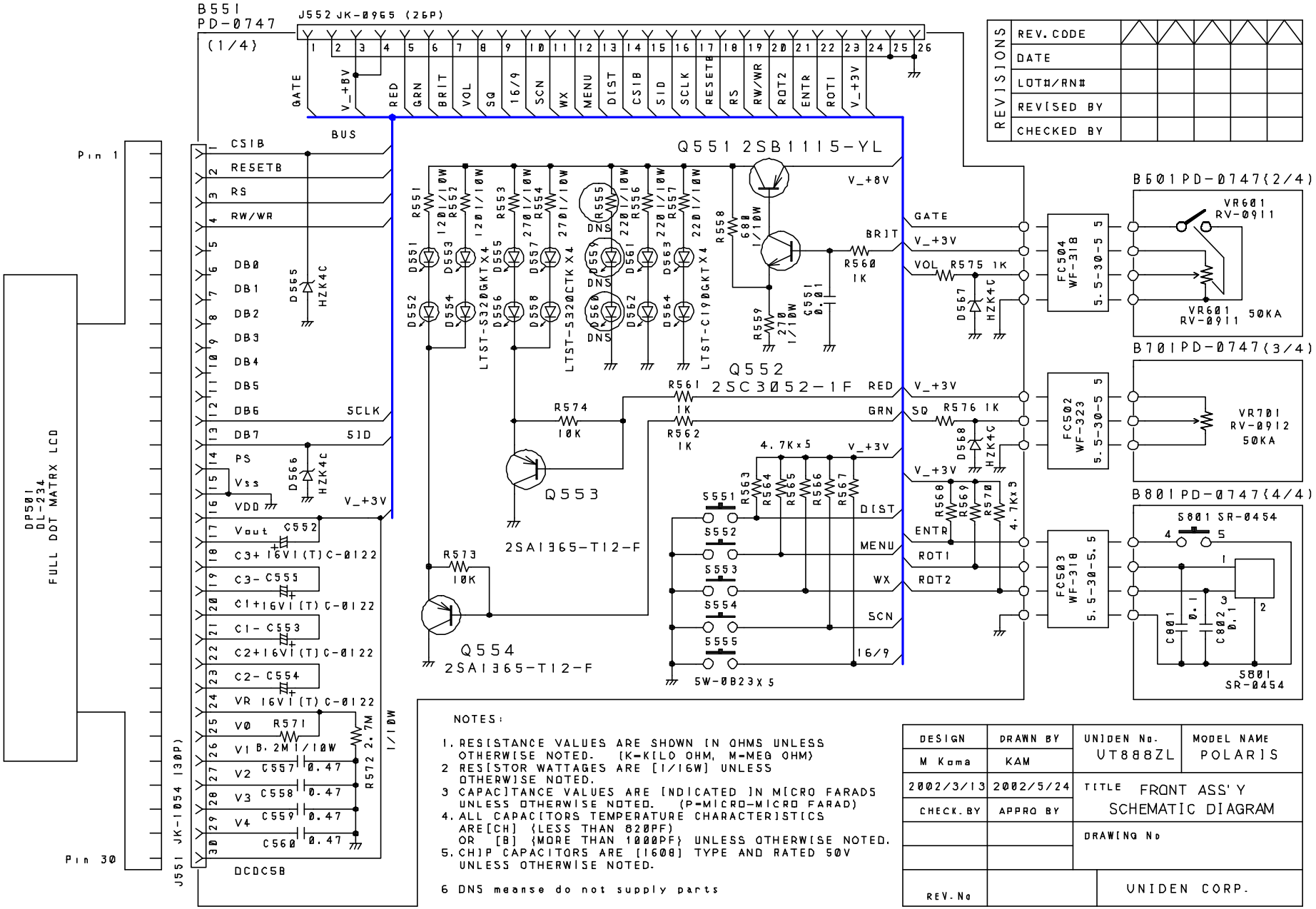

REVISIONS						
	REV. CODE					
	DATE					
	LOT#/RN#					
	REVISED BY					
	CHECKED BY					

NOTES:

1. RESISTANCE VALUES ARE SHOWN IN OHMS UNLESS OTHERWISE NOTED. (K=KILO OHM, M=MEG OHM)
2. RESISTOR WATTAGES ARE (1/16W) UNLESS OTHERWISE NOTED.
3. CAPACITANCE VALUES ARE INDICATED IN MICRO FARADS UNLESS OTHERWISE NOTED. (P=MICRO-MICRO FARAD)
4. ALL CAPACITORS TEMPERATURE CHARACTERISTICS ARE(CH) (LESS THAN 820PF) OR (B) (MORE THAN 1000PF) UNLESS OTHERWISE NOTED.
5. CHIP CAPACITORS ARE (1608) TYPE AND RATED 50V UNLESS OTHERWISE NOTED.

6 DNS meanse do not supply parts

DESIGN	DRAWN BY	UNIDEN No.	MODEL NAME
M Kama	KAM	UT888ZL	POLARIS
2002/3/13	2002/5/24	TITLE FRONT ASS'Y SCHEMATIC DIAGRAM	
CHECK.BY	APPRO BY		
		DRAWING No	
REV.No		UNIDEN CORP.	