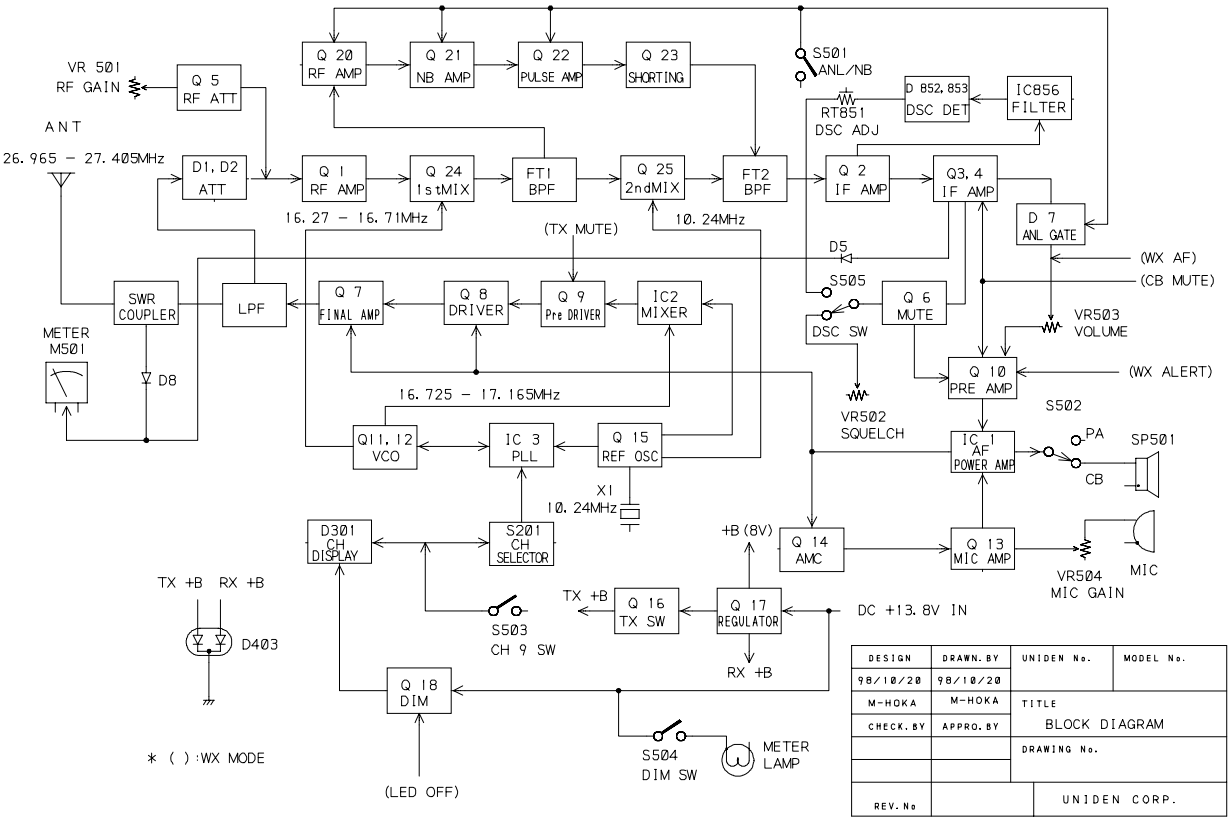
VR 501
RF GAIN
Q 5
RF ATT
ANT
26.965 – 27.405MHz
D1, D2
ATT
Q 20
RF AMP
Q 21
NB AMP
Q 22
PULSE AMP
Q 23
SHORTING
S501
ANL/NB
RT851
DSC ADJ
D 852, 853
DSC DET
IC856
FILTER
Q 1
RF AMP
Q 24
1stMIX
FT1
BPF
Q 25
2ndMIX
FT2
BPF
Q 2
IF AMP
Q3, 4
IF AMP
D 7
ANL GATE
16.27 – 16.71MHz
(TX MUTE)
10.24MHz
D5
(WX AF)
(CB MUTE)
S505
Q 6
MUTE
DSC SW
VR503
VOLUME
SWR
COUPLER
LPF
Q 7
FINAL AMP
Q 8
DRIVER
Q 9
Pre DRIVER
IC2
MIXER
METER
M501
D8
Q 10
PRE AMP
(WX ALERT)
16.725 – 17.165MHz
VR502
SQUELCH
S502
Q11, 12
VCO
IC 3
PLL
Q 15
REF OSC
IC 1
AF
POWER AMP
PA
CB
SP501
X1
10.24MHz
D301
CH
DISPLAY
S201
CH
SELECTOR
+B (8V)
Q 14
AMC
Q 13
MIC AMP
VR504
MIC GAIN
MIC
TX +B
RX +B
D403
S503
CH 9 SW
TX +B
Q 16
TX SW
Q 17
REGULATOR
DC +13.8V IN
RX +B
Q 18
DIM
S504
DIM SW
METER
LAMP
* ( ) :WX MODE
(LED OFF)
DESIGN
98/10/20
DRAWN. BY
98/10/20
UNIDEN No.
MODEL No.
M-HOKA
M-HOKA
TITLE
CHECK. BY
APPRO. BY
BLOCK DIAGRAM
DRAWING No.
REV. No
UNIDEN CORP.