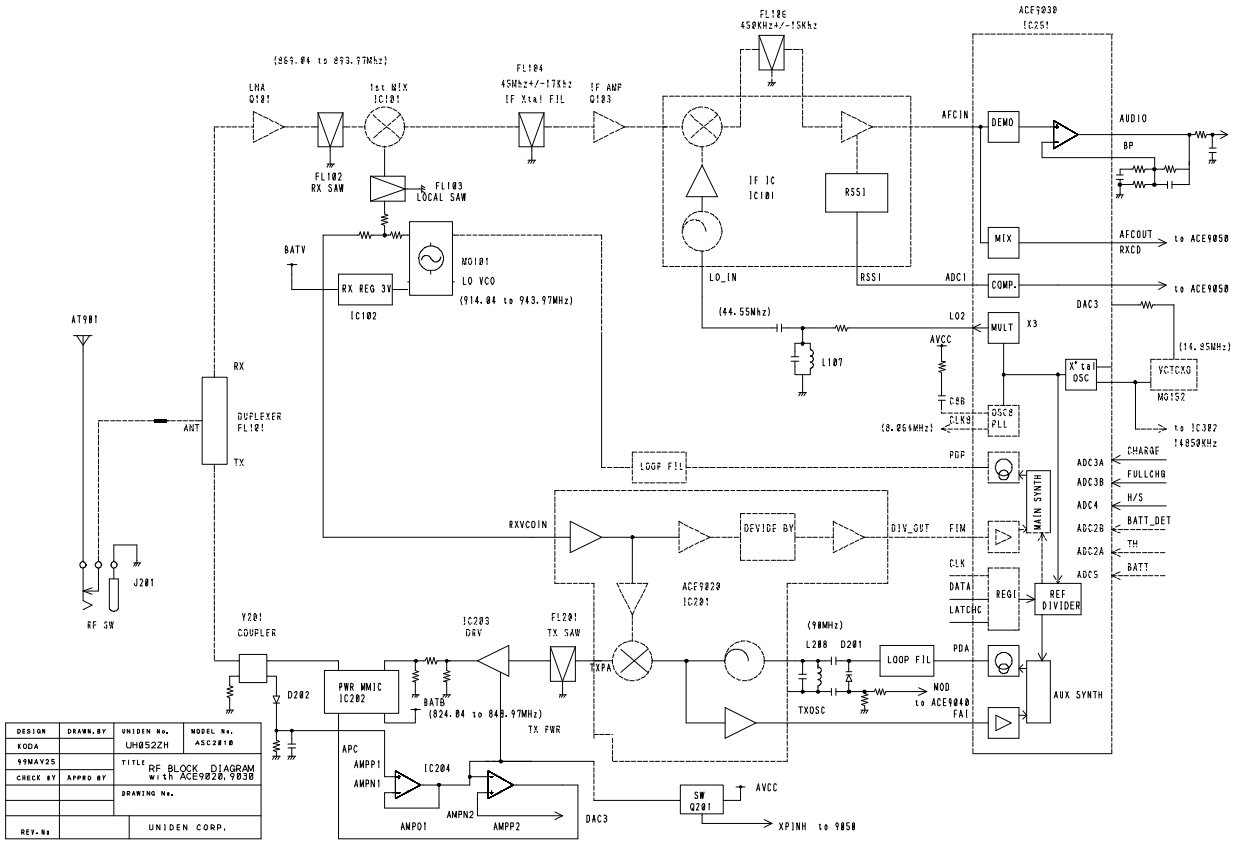

DESIGN	DRAWN.BY	UNIDEN No.	MODEL No.
KODA		UH0522H	ASC2010
99MAY25		TITLE RF BLOCK DIAGRAM with ACE9020,9030	
CHECK BY	APPRO BY		
		DRAWING No.	
REV.No		UNIDEN CORP.	