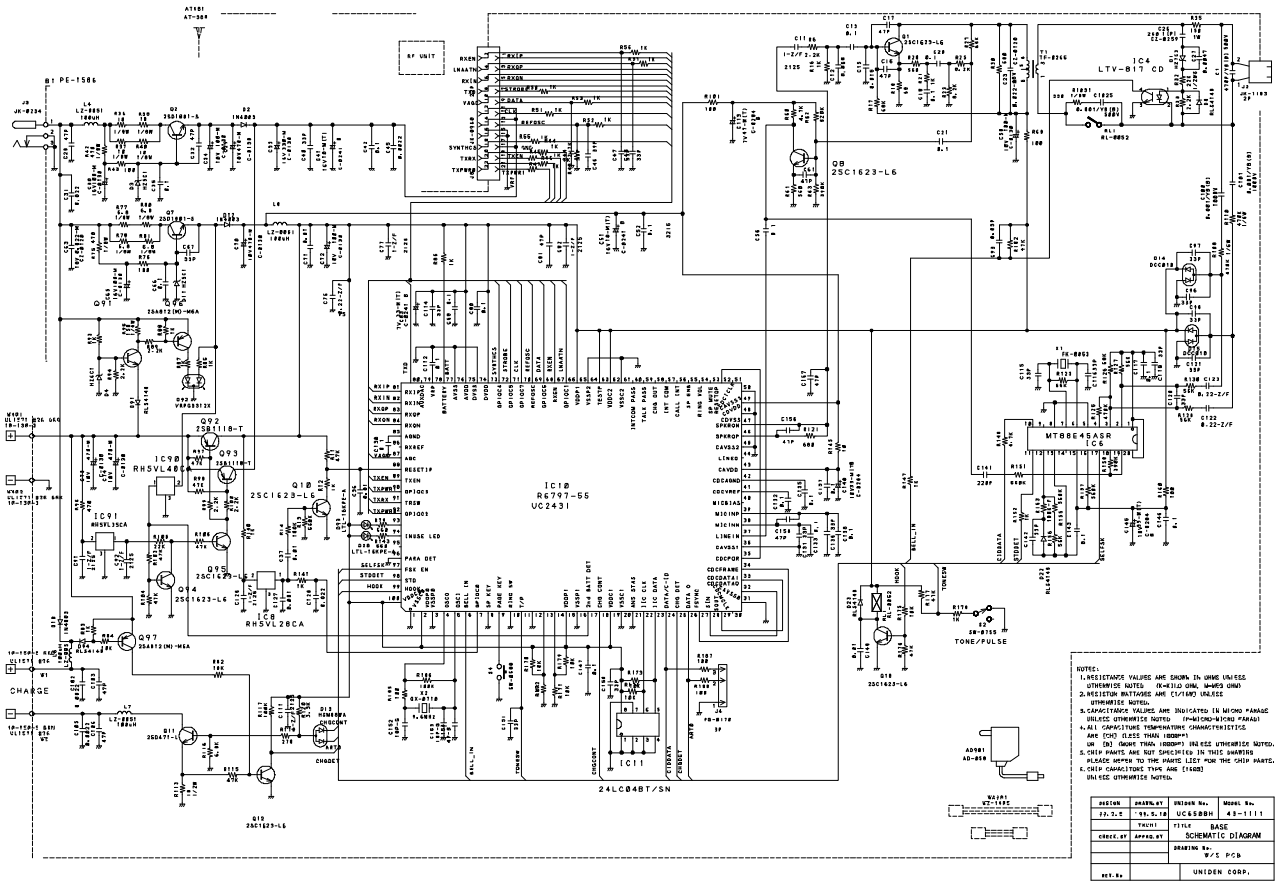
IC10
RG797-55
UC2431
IC4
LTV-817 CD
MT8864SASR
IC6
IC11
24LC04BT/SN
Q8
2SC1623-L6
Q10
2SC1623-L6
IC90
RH5VL48CA
IC91
RH5VL35CA
IC8
RH5VL28CA
Q92
2SB1118-T
Q93
2SB1118-T
Q94
2SC1623-L6
Q95
2SC1623-L6
Q97
2SA872(M)-MEA
Q91
2SA872(M)-MEA
Q19
2SC1623-L6
Q18
2SC1623-L6
Q11
2SD471-L
D13
RD6.8FB2A
CHARGE
TONE/PULSE
SW-8155
B1 PE-1586
J9
JK-8234
AD981
AD-868
W4201
W2-1192
NOTES:
1.RESISTANCE VALUES ARE SHOWN IN OHMS UNLESS OTHERWISE NOTED (K=KILO OHM, M=MEG OHM)
2.RESISTOR WATTAGES ARE (1/16W) UNLESS OTHERWISE NOTED.
3.CAPACITANCE VALUES ARE INDICATED IN MICRO FARADS UNLESS OTHERWISE NOTED (P=MICRO-MICRO FARAD)
4.ALL CAPACITORS TEMPERATURE CHARACTERISTICS ARE (CH) (LESS THAN 1000PP) OR (B) (MORE THAN 1000PP) UNLESS OTHERWISE NOTED.
5.CHIP PARTS ARE NOT SPECIFIED IN THIS SWARIRS PLEASE REFER TO THE PARTS LIST FOR THE CHIP PARTS.
6.CHIP CAPACITORS THE ARE (1608)
UNLESS OTHERWISE NOTED.
DESIGN: 22.3.2
DRAWN BY: 99.5.18
DRAWN No.: UC6SBBH
Model No.: 43-1111
CHECK BY:
APPROV BY:
TRCH1
TITLE: BASE SCHEMATIC DIAGRAM
DRAWING No.: B/S PCB
REV No.:
UNIDEN CORP.