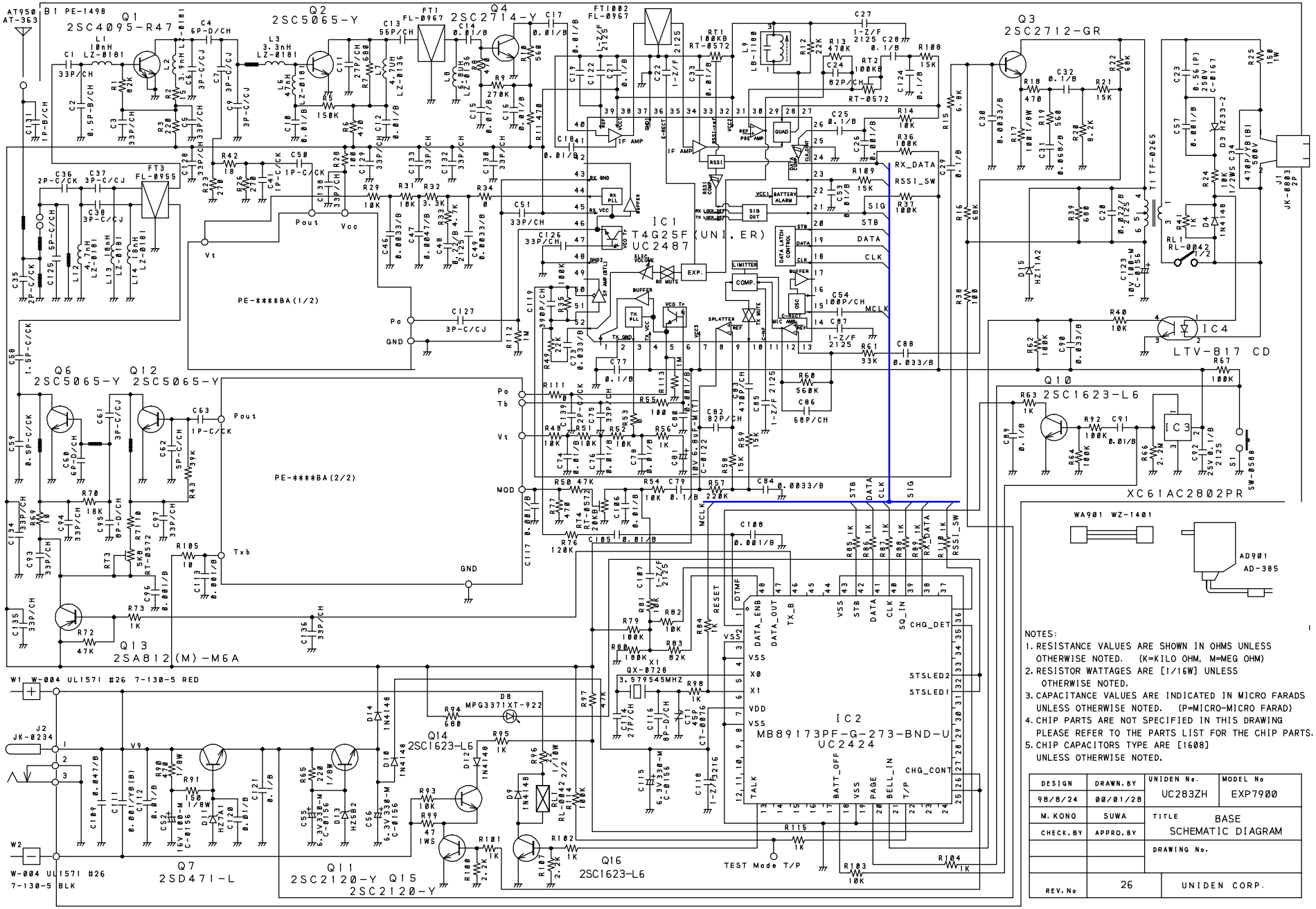

NOTES:

1. RESISTANCE VALUES ARE SHOWN IN OHMS UNLESS OTHERWISE NOTED. (K=KILO OHM, M=MEG OHM)
2. RESISTOR WATTAGES ARE [1/16W] UNLESS OTHERWISE NOTED.
3. CAPACITANCE VALUES ARE INDICATED IN MICRO FARADS UNLESS OTHERWISE NOTED. (P=MICRO-MICRO FARAD)
4. CHIP PARTS ARE NOT SPECIFIED IN THIS DRAWING PLEASE REFER TO THE PARTS LIST FOR THE CHIP PARTS.
5. CHIP CAPACITORS TYPE ARE [1608] UNLESS OTHERWISE NOTED.

DESIGN	DRAWN. BY	UNIDEN No.	MODEL No
98/8/24	00/01/28	UC283ZH	EXP7900
M. KONO	SUWA	TITLE	BASE SCHEMATIC DIAGRAM
CHECK. BY	APPRO. BY		
		DRAWING No.	
REV. No	26	UNIDEN CORP.	