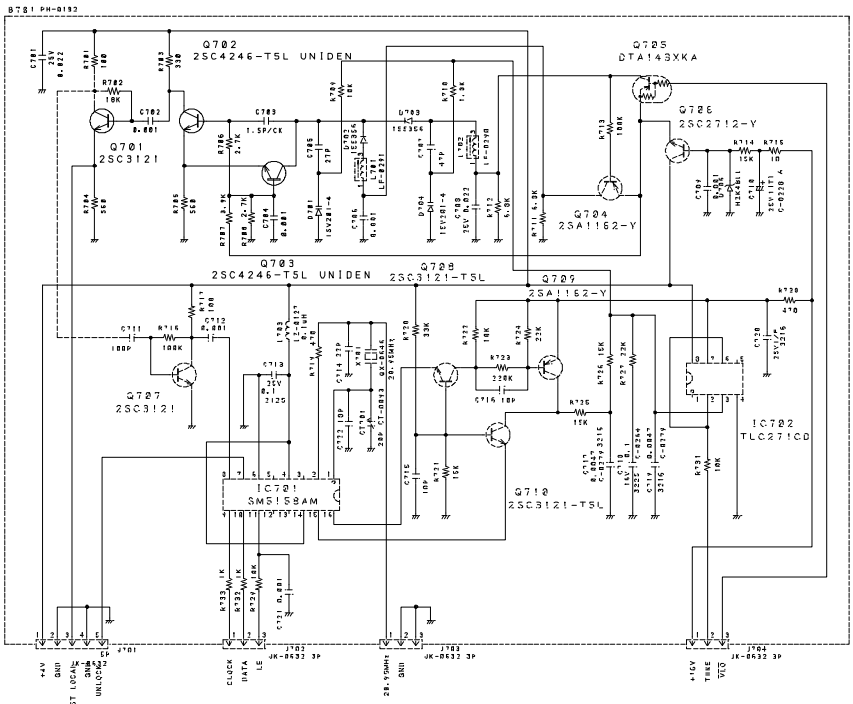

NOTES:

1. RESISTANCE VALUES ARE SHOWN IN OHMS UNLESS OTHERWISE NOTED. (K=KILO OHM, M=MEG OHM)
2. RESISTOR WATTAGES ARE (1/16W) UNLESS OTHERWISE NOTED.
3. CAPACITANCE VALUES ARE INDICATED IN MICRO FARADS UNLESS OTHERWISE NOTED. (P=MICRO-MICRO FARAD)
4. CHIP CAPACITOR'S SIZES ARE (1608) TYPE UMLESS OTHERWISE NOTED.
5. CAPACITOR ARE RATED 50V UNLESS OTHERWISE NOTED.
6. RESISTOR TOLERANCES ARE J UNLESS OTHERWISE NOTED.

DESIGN	DRAWN.BY	UNIDEN No.	MODEL No.
	99.4.2	U8-3082	PRO-7141(28-31MA)
	ICHIMON	TITLE PLL ASS'Y SCHEMATIC DIAGRAM	
CHECK.BY	APPRO.BY		
		DRAWING No.	
REV.No		UNIDEN CORP.	