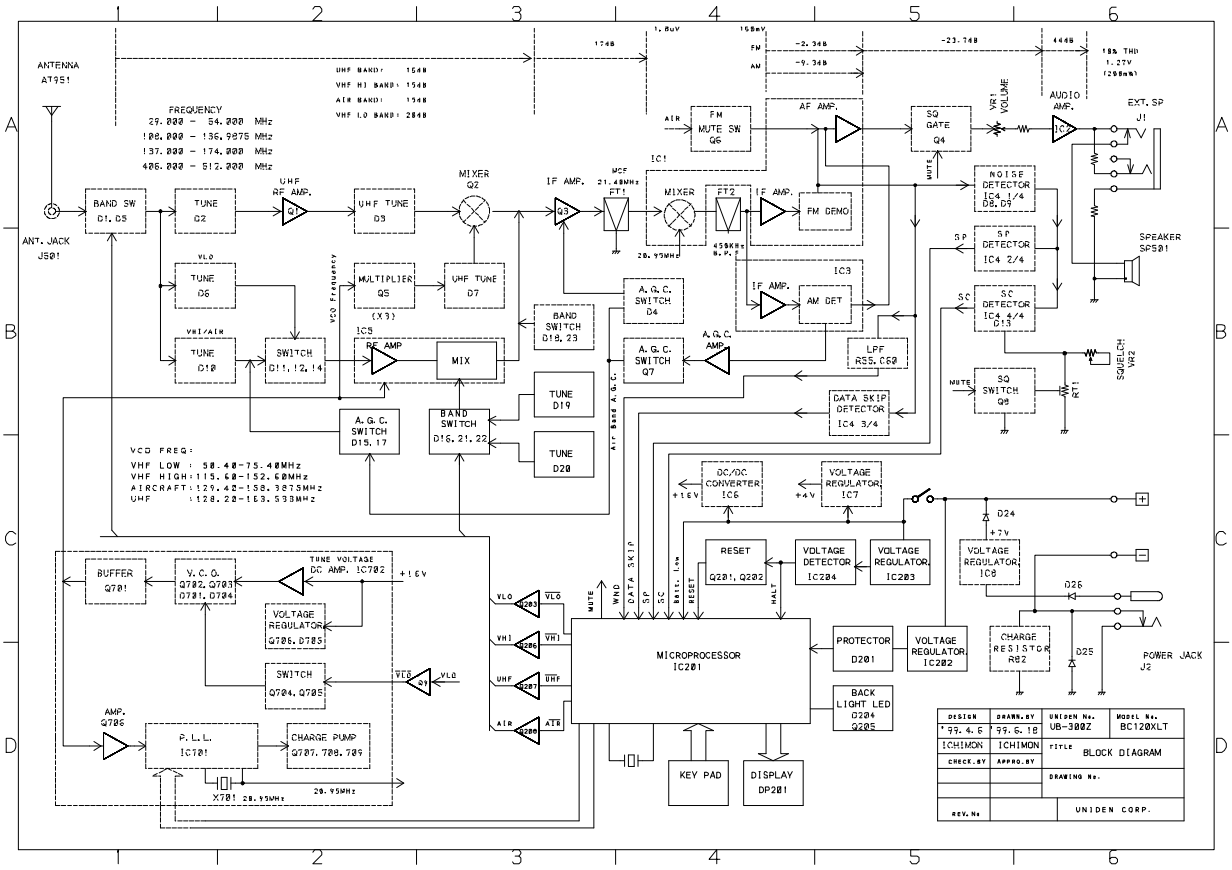
ANTENNA AT951
ANT. JACK J501
FREQUENCY
29.000 - 54.000 MHz
108.000 - 136.9875 MHz
137.000 - 174.000 MHz
406.000 - 512.000 MHz
UHF BAND: 154B
VHF HI BAND: 154B
AIR BAND: 154B
VHF LO BAND: 284B
BAND SW D1, D5
TUNE D2
UHF RF AMP. Q1
UHF TUNE D3
MIXER Q2
IF AMP. Q3
MCF 21.4MHz FT1
MIXER
FT2 455KHz
IF AMP.
FM DEMO
IC1
IC3
IF AMP.
AM DET
FM MUTE SW Q6
AF AMP.
SQ GATE Q4
VR1 VOLUME
AUDIO AMP. IC7
EXT. SP J1
SPEAKER SP501
NOISE DETECTOR IC4 1/4 D8, D9
SP DETECTOR IC4 2/4
SC DETECTOR IC4 4/4 D13
SQUELCH VR2
SQ SWITCH Q9
RT1
LPF R55, C60
DATA SKIP DETECTOR IC4 3/4
A.G.C. AMP.
A.G.C. SWITCH Q7
A.G.C. SWITCH D4
BAND SWITCH D18, 23
TUNE D19
TUNE D20
TUNE D6
MULTIPLIER Q5 (X3)
UHF TUNE D7
VCO FREQUENCY
TUNE D10
SWITCH D11, 12, 14
RF AMP
MIX
A.G.C. SWITCH D15, 17
BAND SWITCH D16, 21, 22
VCO FREQ:
VHF LOW : 58.40-75.40MHz
VHF HIGH : 115.60-152.60MHz
AIRCRAFT : 129.42-158.387.5MHz
UHF : 128.22-163.593MHz
DC/DC CONVERTER IC6
VOLTAGE REGULATOR IC7
D24
VOLTAGE REGULATOR IC8
RESET Q201, Q202
VOLTAGE DETECTOR IC204
VOLTAGE REGULATOR IC203
D26
D25
CHARGE RESISTOR R82
POWER JACK J2
BUFFER Q701
V.C.O. Q702, Q703 Q701, Q704
TUNE VOLTAGE DC AMP. IC702
VOLTAGE REGULATOR Q706, Q785
SWITCH Q704, Q705
AMP. Q706
P.L.L. IC701
CHARGE PUMP Q707, 708, 709
X701 28.95MHz
MICROPROCESSOR IC201
PROTECTOR D201
VOLTAGE REGULATOR IC202
BACK LIGHT LED D204 Q205
KEY PAD
DISPLAY DP201
DESIGN
DRAWN.BY
UNIDEN No.
MODEL No.
UB-300Z
BC120XLT
ICHIMON
ICHIMON
CHECK.BY
APPRO.BY
TITLE
BLOCK DIAGRAM
DRAWING No.
REV. No
UNIDEN CORP.