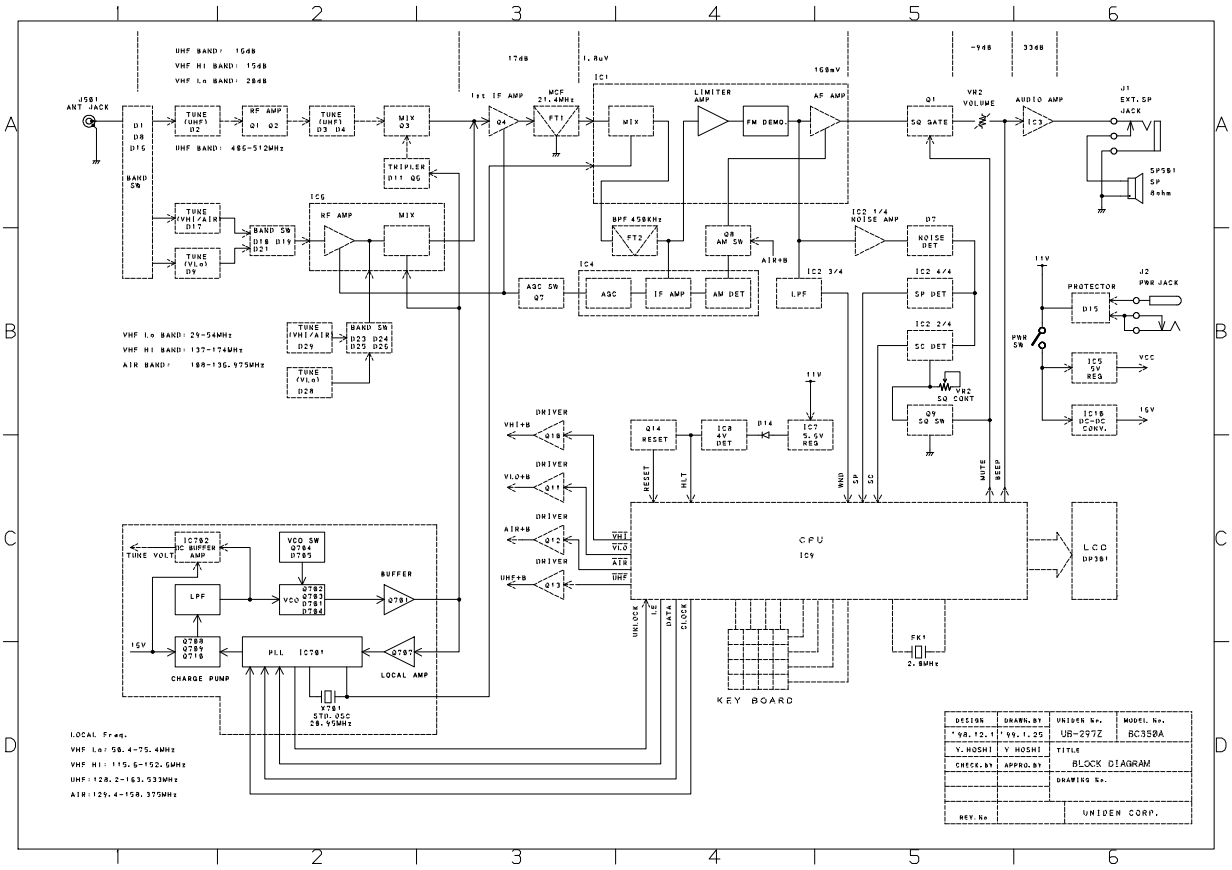
UHF BAND: 16dB
VHF HI BAND: 15dB
VHF Lo BAND: 28dB
17dB
1.8uV
160mV
-9dB
33dB
J581 ANT JACK
D1 D8 D15
BAND SW
TUNE (UHF) D2
RF AMP Q1 Q2
TUNE (UHF) D3 D4
MIX Q3
UHF BAND: 485-512MHz
TRIPLER D11 Q5
1st IF AMP Q4
MCF 21.4MHz FT1
IC1
MIX
LIMITER AMP
FM DEMO.
AF AMP
Q1 SQ GATE
VR2 VOLUME
AUDIO AMP IC3
J1 EXT.SP JACK
SP581 SP 8ohm
TUNE (VHI/AIR) D17
TUNE (VLo) D9
BAND SW D18 D19 D21
IC6
RF AMP
MIX
BPF 450KHz FT2
Q8 AM SW
AIR+B
IC2 1/4 NOISE AMP
D7 NOISE DET
IC4
AGC SW Q7
AGC
IF AMP
AM DET
IC2 3/4 LPF
IC2 4/4 SP DET
IC2 2/4 SC DET
VR2 SQ CONT
Q9 SQ SW
11V
J2 PWR JACK
PROTECTOR D15
PWR SW
IC5 5V REG
VCC
IC18 DC-DC CONV.
15V
VHF Lo BAND: 29-54MHz
VHF HI BAND: 137-174MHz
AIR BAND: 188-136.975MHz
TUNE (VHI/AIR) D29
BAND SW D23 D24 D25 D26
TUNE (VLo) D28
DRIVER
VHI+B Q10
VLO+B Q11
AIR+B Q12
UHF+B Q13
Q14 RESET
IC8 4V DET
D14
IC7 5.6V REG
RESET
HLT
WND
SP
SC
MUTE
BEEP
CPU IC9
LCD DP381
VHI
VLO
AIR
UHF
UNLOCK
CE
DATA
CLOCK
KEY BOARD
FK1 2.8MHz
TUNE VOLT.
IC792 DC BUFFER AMP
VCO SW Q784 Q785
VCO Q782 Q783 Q781 Q784
BUFFER Q781
LPF
15V
Q788 Q789 Q718
CHARGE PUMP
PLL IC701
Q787 LOCAL AMP
X701 STD.OSC 28.95MHz
LOCAL Freq.
VHF Lo: 50.4-75.4MHz
VHF HI: 115.6-152.6MHz
UHF: 128.2-163.533MHz
AIR: 129.4-158.375MHz
DESIGN '98.12.1
DRAWN.BY '99.1.25
UNIDEN No. UB-297Z
MODEL No. BC350A
Y.HOSHI
Y HOSHI
TITLE BLOCK DIAGRAM
CHECK.BY
APPRO.BY
DRAWING No.
REV.No
UNIDEN CORP.