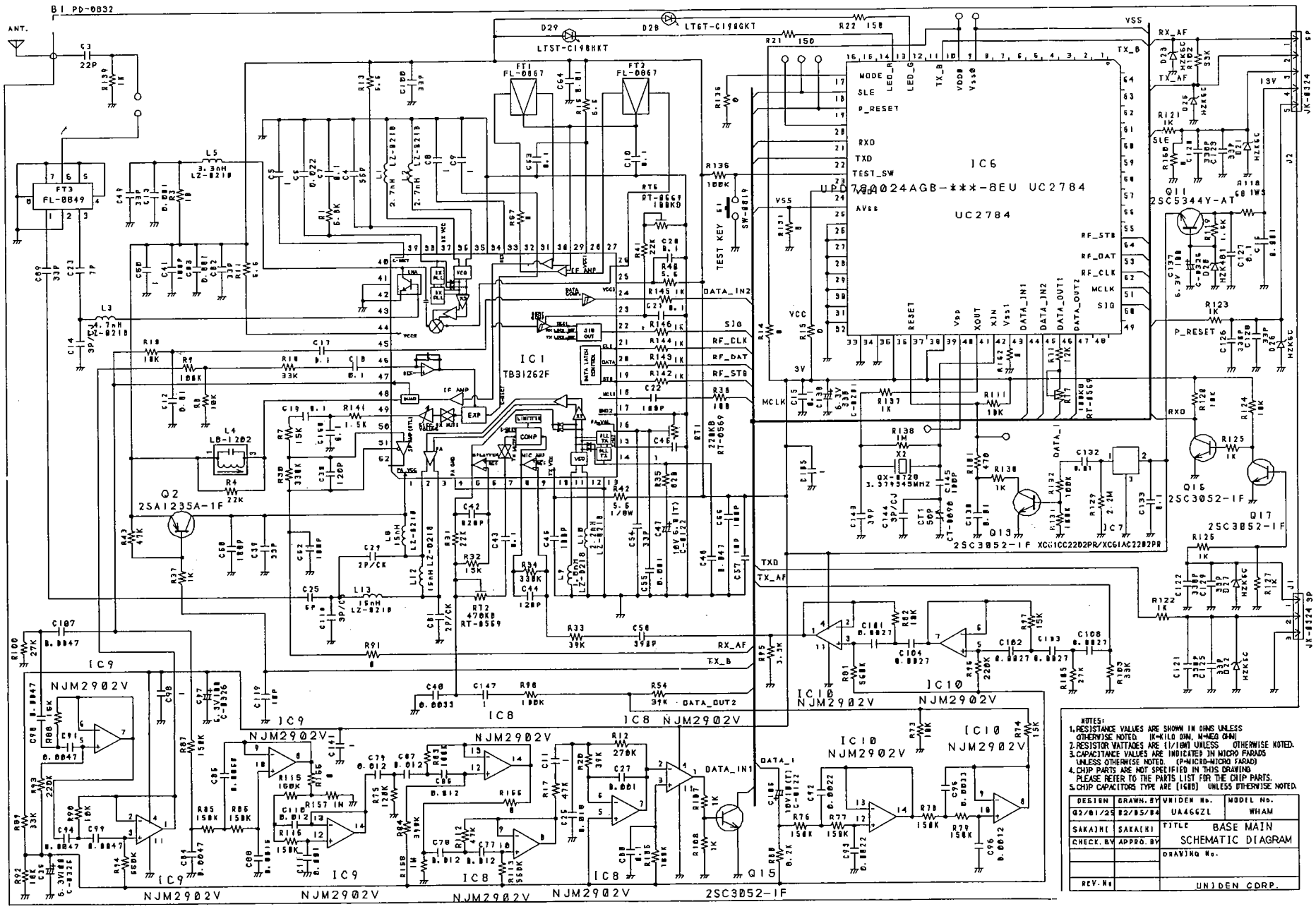
B1 PD-0832
ANT.
IC6
UPD78P024AGB-***-8EU UC2784
UC2784
IC1
TB31262F
IC8
IC9
IC10
NJM2902V
Q2
2SA1235A-1F
Q11
2SC5344Y-AT
Q15
2SC3052-1F
Q16
2SC3052-1F
Q17
2SC3052-1F
Q13
2SC3052-1F XC61CC22D2PR/XC61AC22D2PR
FT1
FL-0867
FT2
FL-0867
FT3
FL-0849
L4
LB-1202
L5
3.3nH
LZ-8218
L3
2.7nH
LZ-8218
LTST-C198HKT
LTGT-C198GKT
TEST KEY
SW-8819
DATA_IN2
SIO
RF_CLK
RF_DAT
RF_STB
MCLK
RX_AF
TX_B
TX_AF
TXD
RXD
P_RESET
DATA_OUT2
DATA_IN1
DATA_I
JK-8324
JK-8324 3P
J1
J2
NOTES:
1. RESISTANCE VALUES ARE SHOWN IN OHMS UNLESS OTHERWISE NOTED. (K=KILO OHM, M=MEG OHM)
2. RESISTOR WATTAGES ARE (1/16W) UNLESS OTHERWISE NOTED.
3. CAPACITANCE VALUES ARE INDICATED IN MICRO FARADS UNLESS OTHERWISE NOTED. (P=MICRO=MICRO FARAD)
4. CHIP PARTS ARE NOT SPECIFIED IN THIS DRAWING. PLEASE REFER TO THE PARTS LIST FOR THE CHIP PARTS.
5. CHIP CAPACITORS TYPE ARE [1608] UNLESS OTHERWISE NOTED.
DESIGN
DRAWN. BY
UNIDEN No.
MODEL No.
02/01/25
02/05/04
UA466ZL
WHAM
SAKAIKI
SAKAIKI
CHECK. BY
APPRO. BY
TITLE
BASE MAIN
SCHEMATIC DIAGRAM
DRAWING No.
REV. No
UNIDEN CORP.