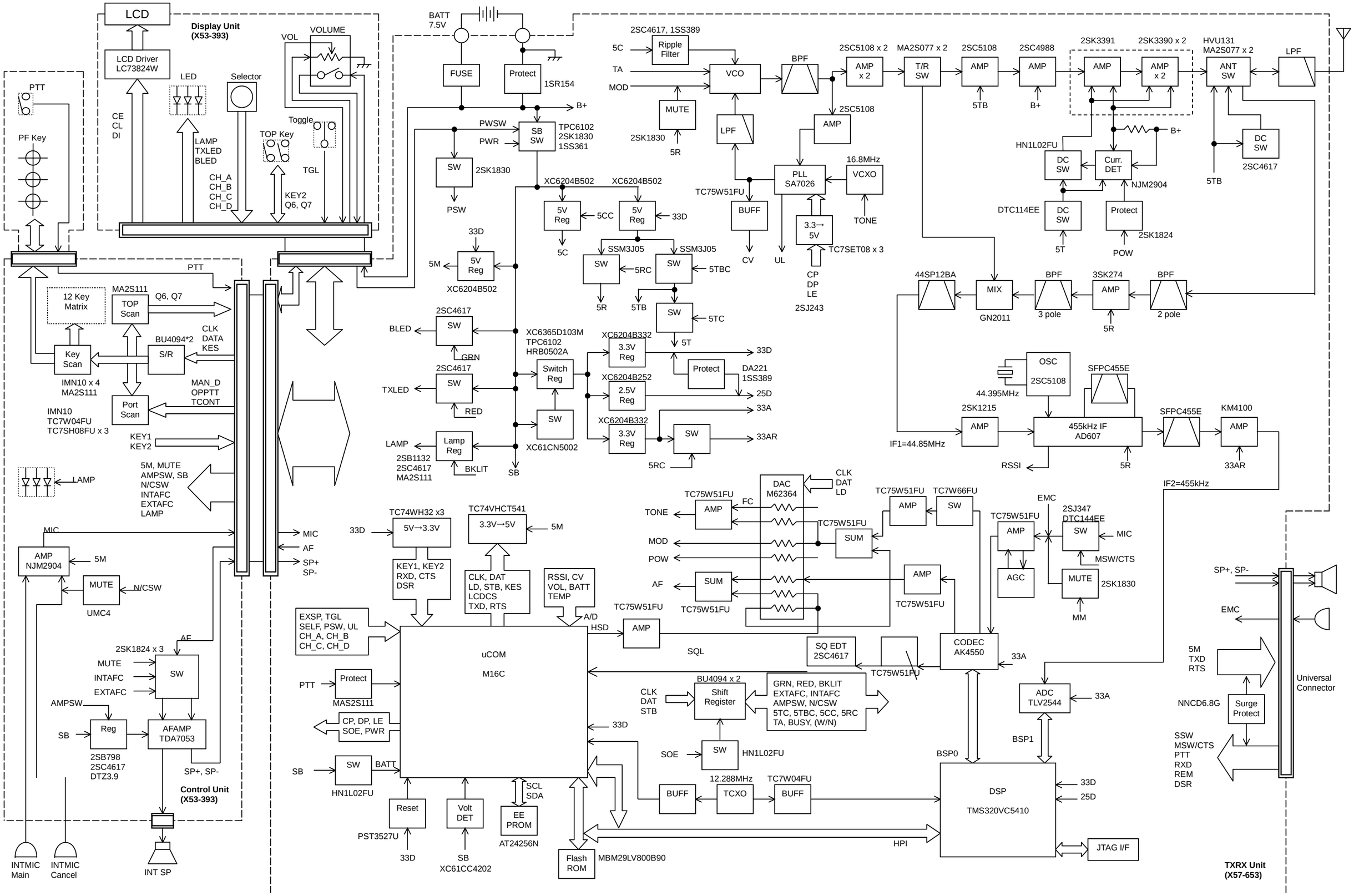
LCD
Display Unit (X53-393)
LCD Driver LC73824W
VOLUME
VOL
LED
Selector
PTT
PF Key
CE
CL
DI
LAMP
TXLED
BLED
TOP Key
Toggle
TGL
CH_A
CH_B
CH_C
CH_D
KEY2
Q6, Q7
BATT 7.5V
FUSE
Protect
1SR154
B+
PWSW
PWR
SB SW
TPC6102
2SK1830
1SS361
SW
2SK1830
PSW
XC6204B502
XC6204B502
5V Reg
5CC
5V Reg
33D
5C
33D
5M
5V Reg
XC6204B502
SSM3J05
SSM3J05
SW
5RC
SW
5TBC
5R
5TB
SW
5TC
5T
2SC4617
BLED
SW
GRN
XC6365D103M
TPC6102
HRB0502A
XC6204B332
3.3V Reg
33D
2SC4617
TXLED
SW
RED
Switch Reg
Protect
DA221
1SS389
XC6204B252
2.5V Reg
25D
33A
SW
XC6204B332
3.3V Reg
SW
33AR
LAMP
Lamp Reg
2SB1132
2SC4617
MA2S111
BKLIT
XC61CN5002
SB
5RC
2SC4617, 1SS389
5C
Ripple Filter
TA
VCO
MOD
MUTE
2SK1830
5R
LPF
BPF
2SC5108 x 2
AMP x 2
MA2S077 x 2
T/R SW
2SC5108
AMP
5TB
2SC4988
AMP
B+
2SK3391
2SK3390 x 2
AMP
AMP x 2
HVU131
MA2S077 x 2
ANT SW
LPF
2SC5108
AMP
PLL SA7026
16.8MHz
VCXO
TONE
TC75W51FU
BUFF
CV
UL
3.3→5V
TC7SET08 x 3
CP
DP
LE
2SJ243
HN1L02FU
DC SW
Curr. DET
NJM2904
B+
DC SW
2SC4617
5TB
DTC114EE
DC SW
Protect
2SK1824
5T
POW
44SP12BA
MIX
GN2011
BPF
3 pole
3SK274
AMP
5R
BPF
2 pole
OSC
2SC5108
44.395MHz
SFPC455E
2SK1215
AMP
455kHz IF
AD607
SFPC455E
KM4100
AMP
IF1=44.85MHz
RSSI
5R
33AR
IF2=455kHz
DAC M62364
CLK
DAT
LD
TC75W51FU
AMP
FC
TONE
TC75W51FU
SUM
MOD
POW
AF
SUM
TC75W51FU
TC75W51FU
AMP
TC7W66FU
SW
EMC
TC75W51FU
AMP
2SJ347
DTC144EE
SW
MIC
MSW/CTS
AGC
MUTE
2SK1830
MM
AMP
TC75W51FU
TC74WH32 x3
5V→3.3V
33D
KEY1, KEY2
RXD, CTS
DSR
TC74VHCT541
3.3V→5V
5M
CLK, DAT
LD, STB, KES
LCDCS
TXD, RTS
RSSI, CV
VOL, BATT
TEMP
A/D
EXSP, TGL
SELF, PSW, UL
CH_A, CH_B
CH_C, CH_D
uCOM
M16C
HSD
AMP
TC75W51FU
SQL
SQ EDT
2SC4617
TC75W51FU
CODEC
AK4550
33A
PTT
Protect
MAS2S111
CP, DP, LE
SOE, PWR
33D
BU4094 x 2
CLK
DAT
STB
Shift Register
GRN, RED, BKLIT
EXTAFC, INTAFC
AMPSW, N/CSW
5TC, 5TBC, 5CC, 5RC
TA, BUSY, (W/N)
ADC
TLV2544
33A
NNCD6.8G
Surge Protect
SOE
SW
HN1L02FU
BSP1
BSP0
SSW
MSW/CTS
PTT
RXD
REM
DSR
SB
SW
BATT
HN1L02FU
SCL
SDA
12.288MHz
TC7W04FU
BUFF
TCXO
BUFF
DSP
TMS320VC5410
33D
25D
Reset
PST3527U
Volt DET
EE PROM
AT24256N
33D
SB
XC61CC4202
Flash ROM
MBM29LV800B90
HPI
JTAG I/F
SP+, SP-
EMC
5M
TXD
RTS
Universal Connector
TXRX Unit (X57-653)
12 Key Matrix
MA2S111
TOP Scan
Q6, Q7
CLK
DATA
KES
BU4094*2
S/R
Key Scan
IMN10 x 4
MA2S111
MAN_D
OPPTT
TCONT
Port Scan
IMN10
TC7W04FU
TC7SH08FU x 3
KEY1
KEY2
5M, MUTE
AMPSW, SB
N/CSW
INTAFC
EXTAFC
LAMP
LAMP
MIC
AMP NJM2904
5M
MUTE
N/CSW
UMC4
MIC
AF
SP+
SP-
AF
2SK1824 x 3
MUTE
INTAFC
EXTAFC
SW
AMPSW
SB
Reg
2SB798
2SC4617
DTZ3.9
AFAMP TDA7053
SP+, SP-
Control Unit (X53-393)
INTMIC Main
INTMIC Cancel
INT SP