USE FOR	SYMBOL	REVISION NO	ISSUED	DATE
	1 ×			- -
	2 ×			- -
	3 ×			- -
	4 ×			- -
	5 ×			- -
	6 ×			- -
	7 ×			- -
	8 ×			- -
	9 ×			- -

TK-7102H(K2) BLOCK DIAGRAM

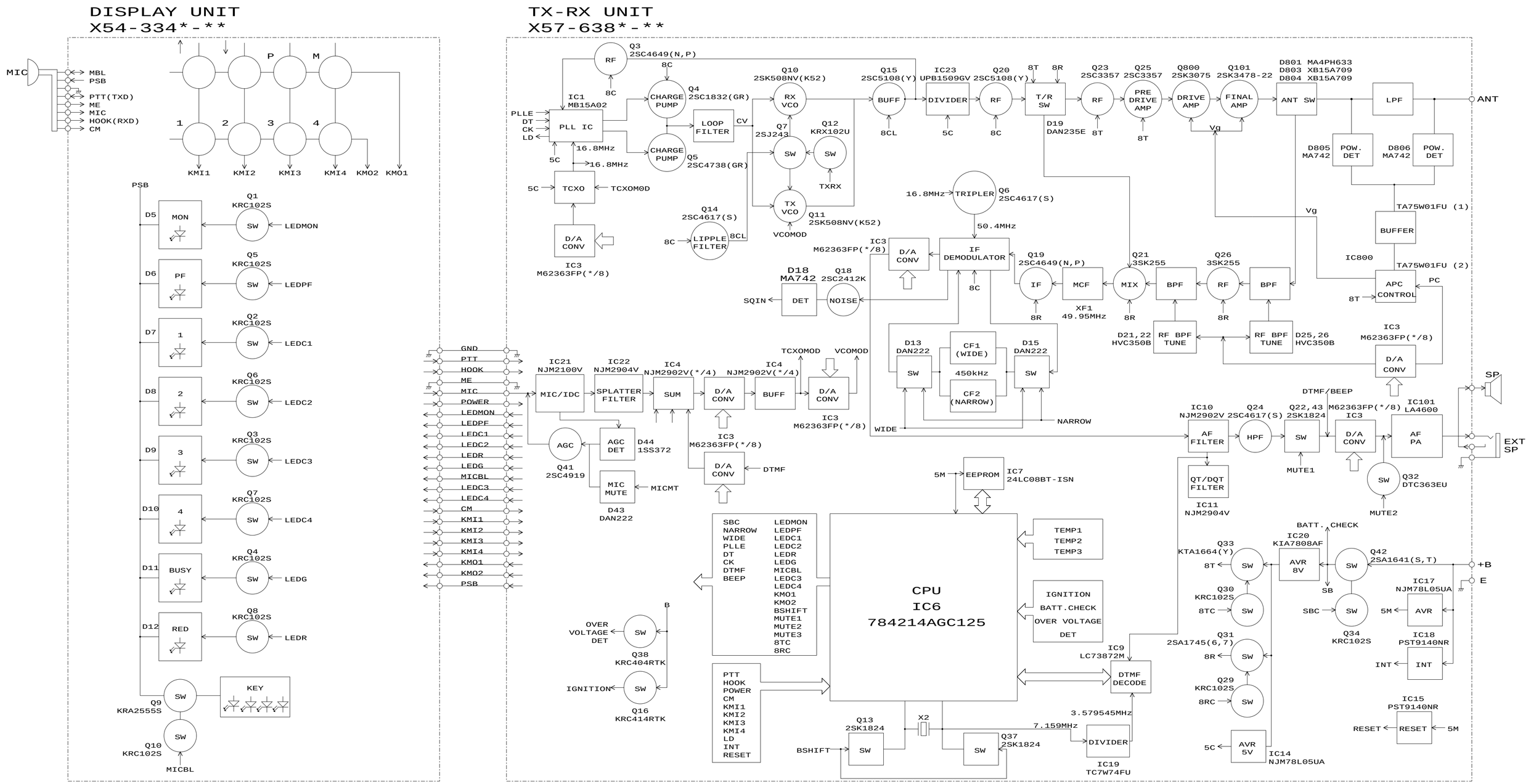

DESIGNED	DRAWN	CHECKED	APPROVED	PART NAME
				BLOCK DIAGRAM
				PART NUMBER

株式会社ケンウッド KENWOOD CORPORATION