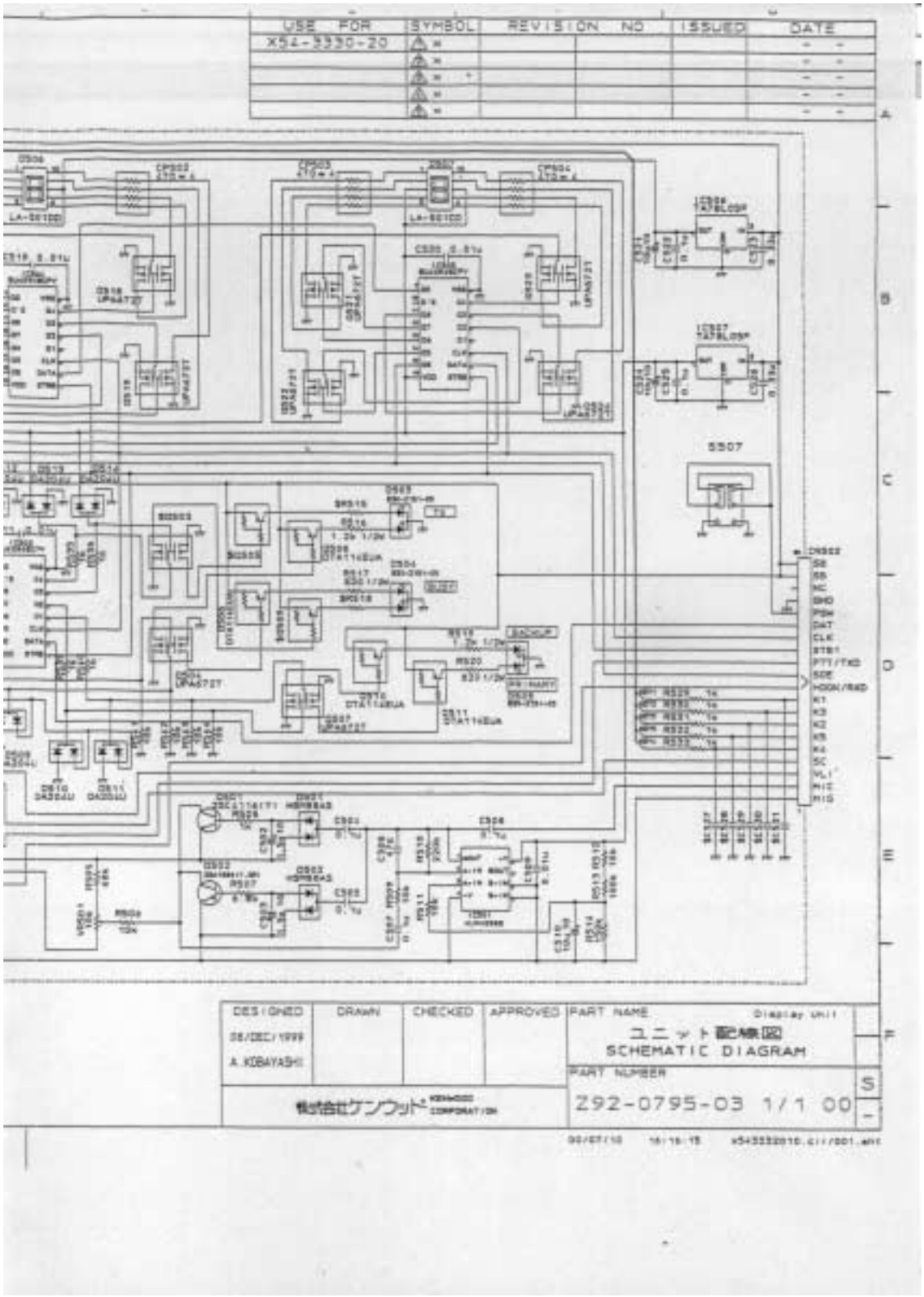

FCC ID : ALH31113110

MODEL NAME : TKR-850K

CIRCUIT SCHEMATIC:

DISPLAY Unit (Right)