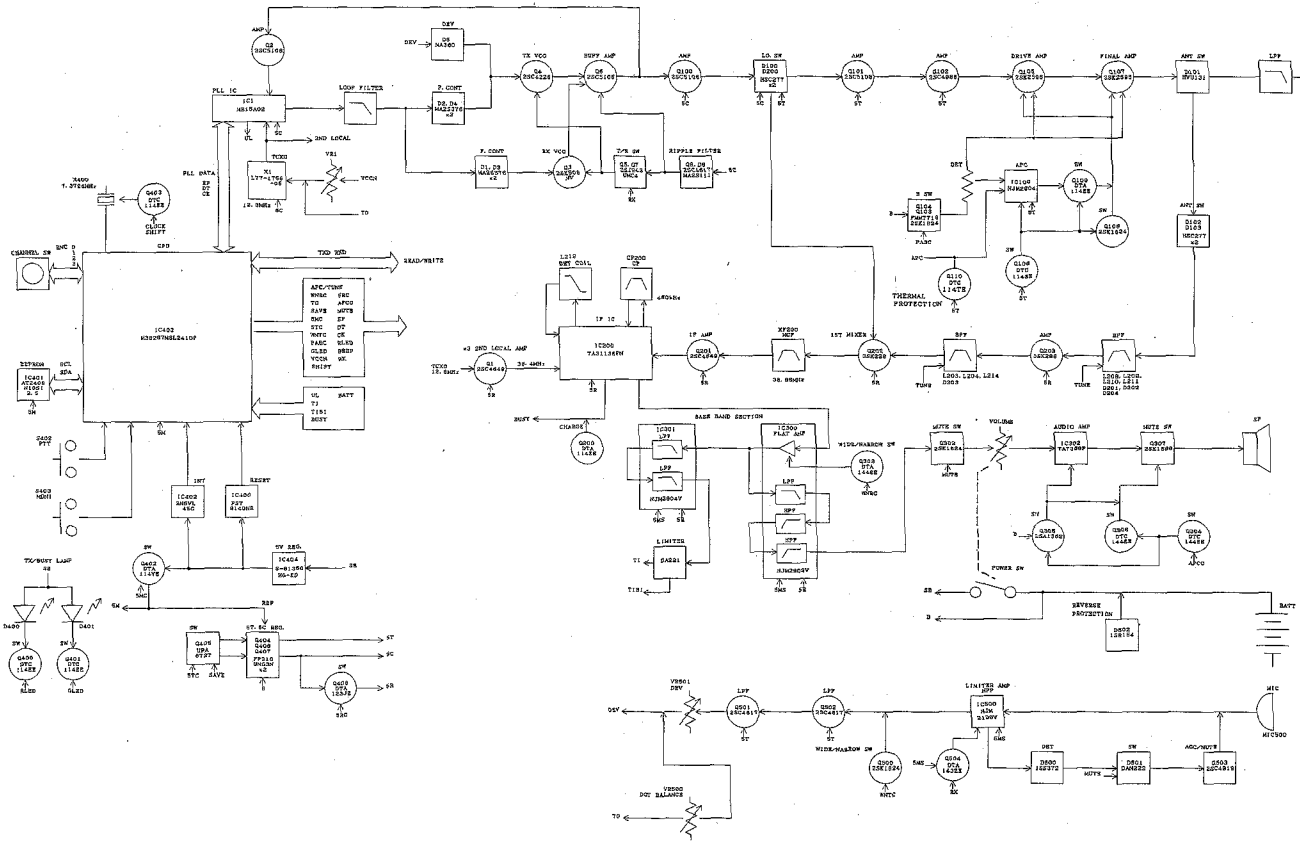

TK-3102/3107

DESIGNED	DRAWN	CHECKED	APPROVED	PARTS NAME
1999.05.18 T.SATO	1999.04.12 T.SATO			EX-3092 BLOCK DIAGRAM
				PARTS NUMBER