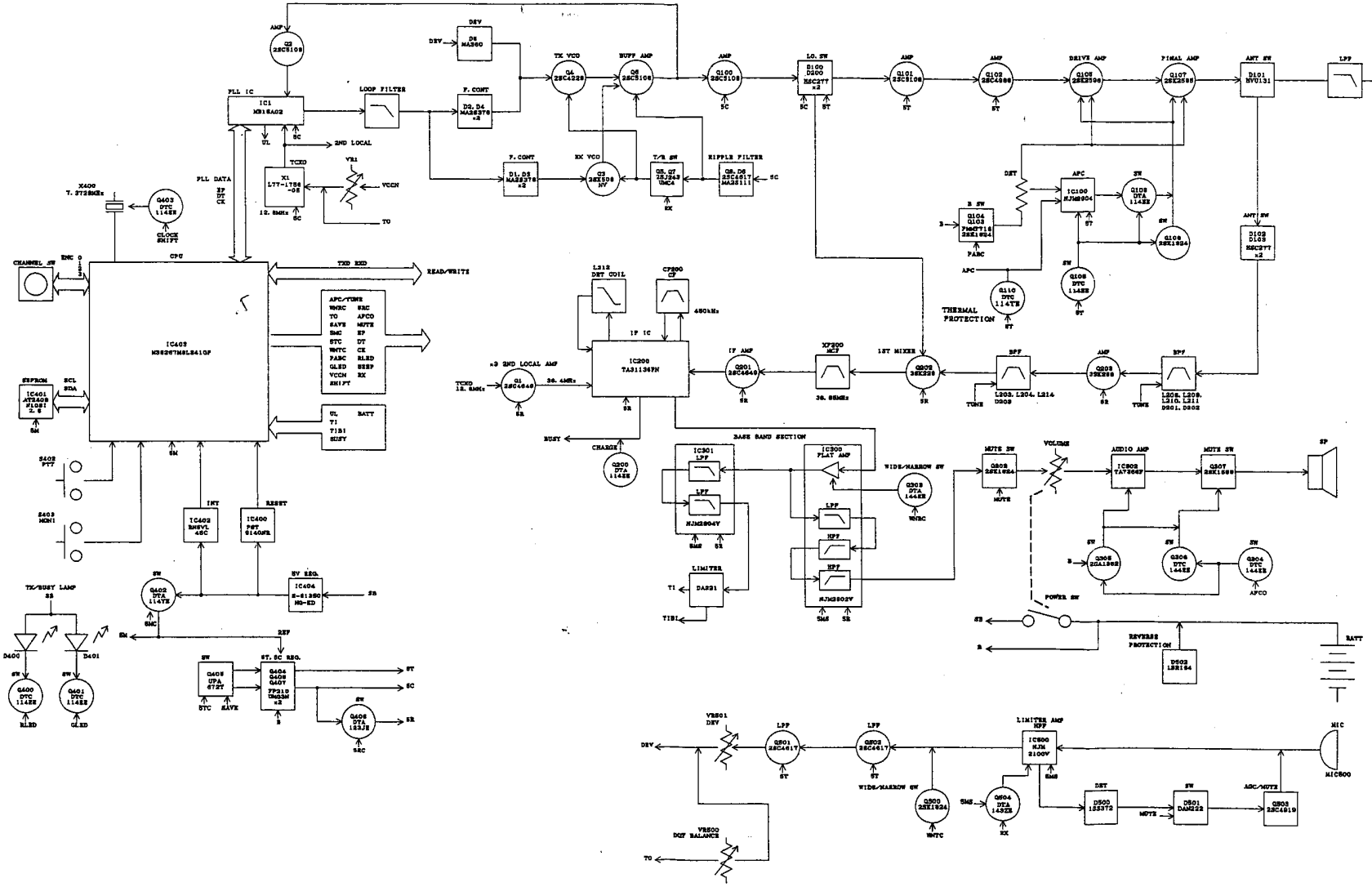

TK-3102/TK-3107

DESIGNED	DRAWN	CHECKED	APPROVED	PARTS NAME
1999. 08. 18 T. SATO	1999. 04. 12 T. SATO			BLOCK DIAGRAM
				PARTS NUMBER

node: scad12 directory: /users/sch/work/c5241 page: E3092BLK1
time: 15:30 19-may-99 comment: c865441_70%