2.1033 (c) BLOCK DIAGRAM

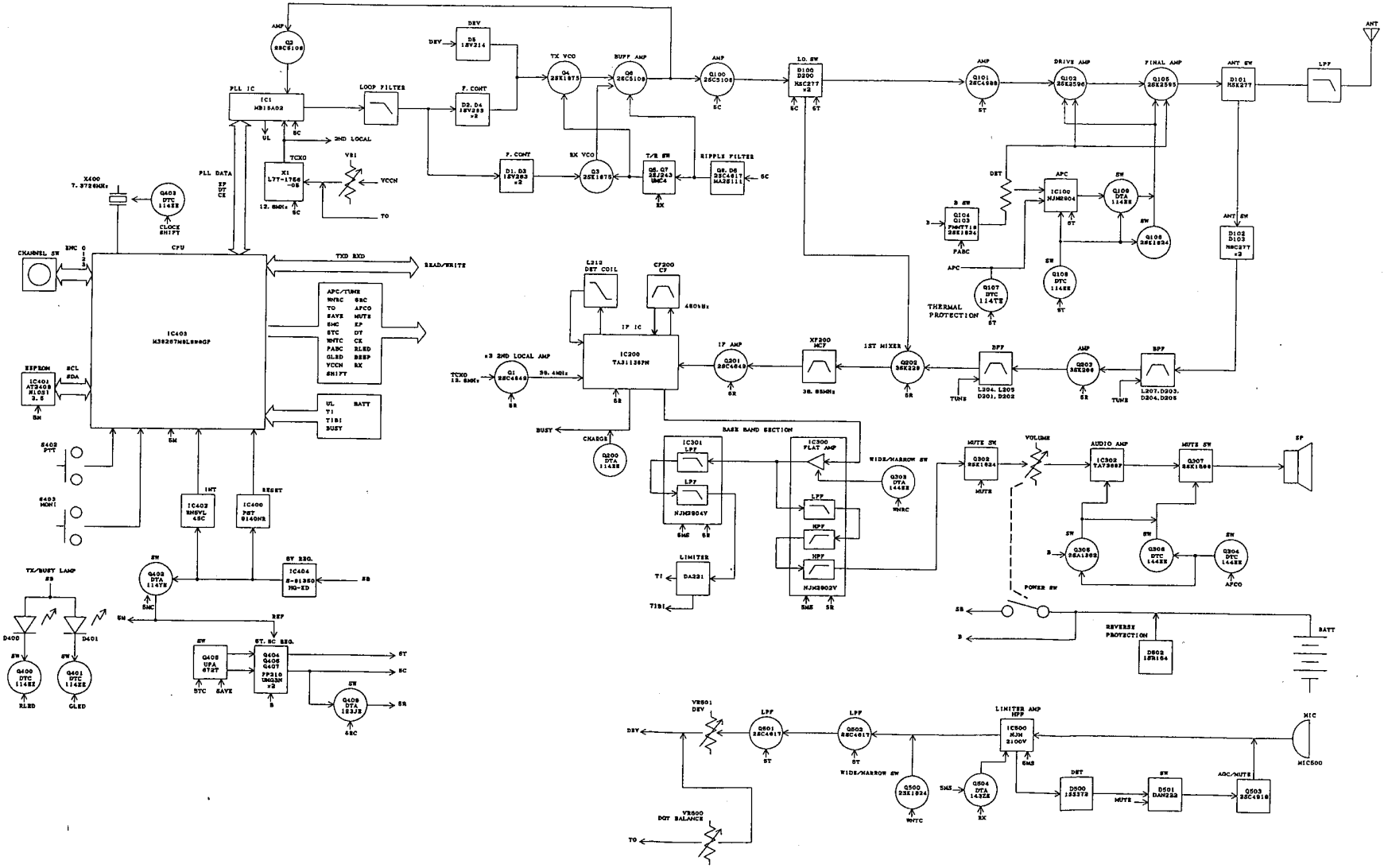

TK-2102/TK-2107

DESIGNED	DRAWN	CHECKED	APPROVED	PARTS NAME
1999. 04. 12 T. SATO	1999. 04. 12 T. SATO			EX-3091 BLOCK DIAGRAM
				PARTS NUMBER