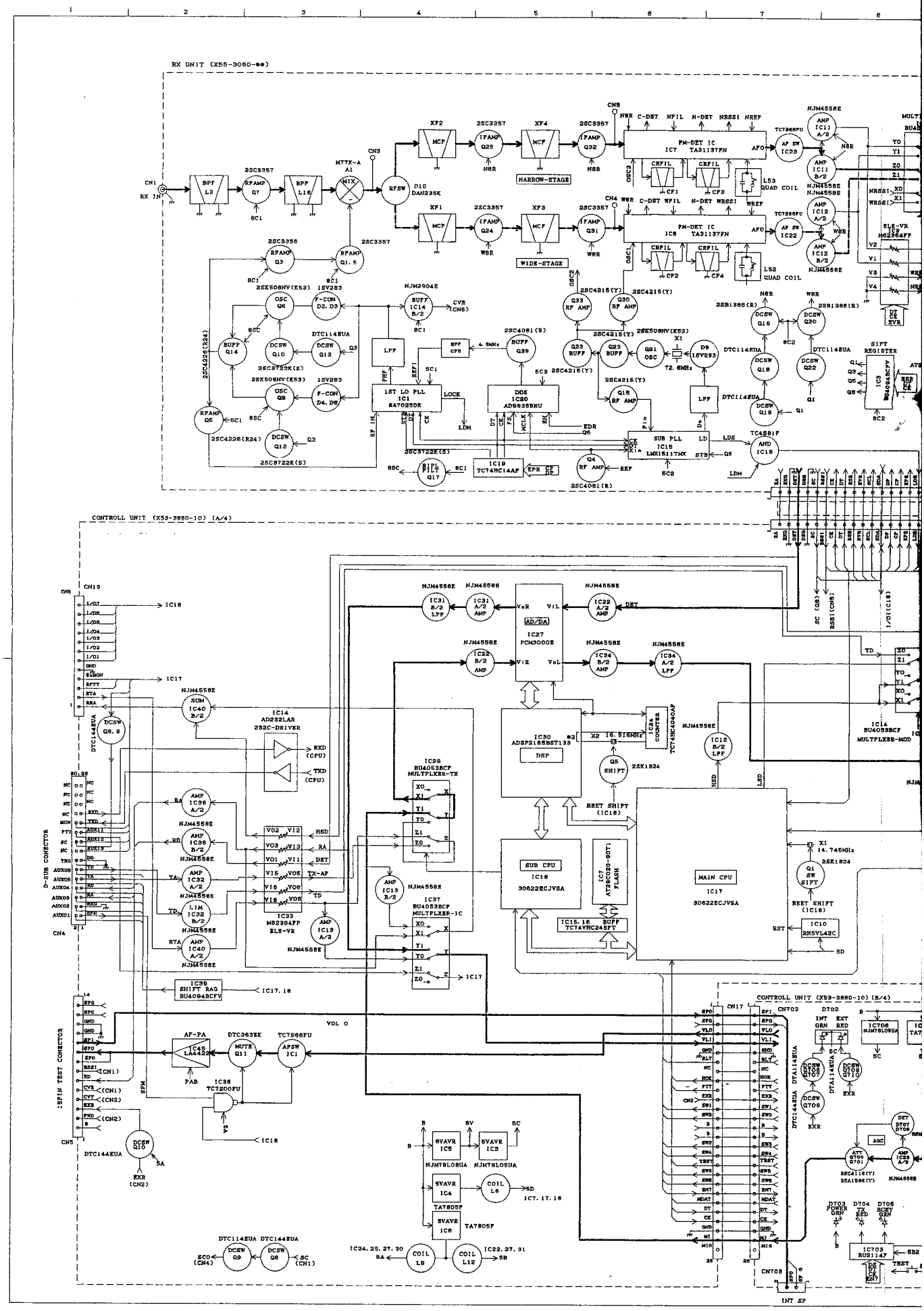

node: scadB directory: /users/sch/work/c5231 page: EX3064BLKZ
time: 04:14 22-Jul-99 comment: c856793_70%

USE FOR	SYMBOL	REVISION NO	CODE	ISSUED	DATE
	⚠ X				19 - -
	⚠ X				19 - -
	⚠ X				19 - -
	⚠ X				19 - -
	⚠ X				19 - -
	⚠ X				19 - -
	⚠ X				19 - -
	⚠ X				19 - -
	⚠ X				19 - -

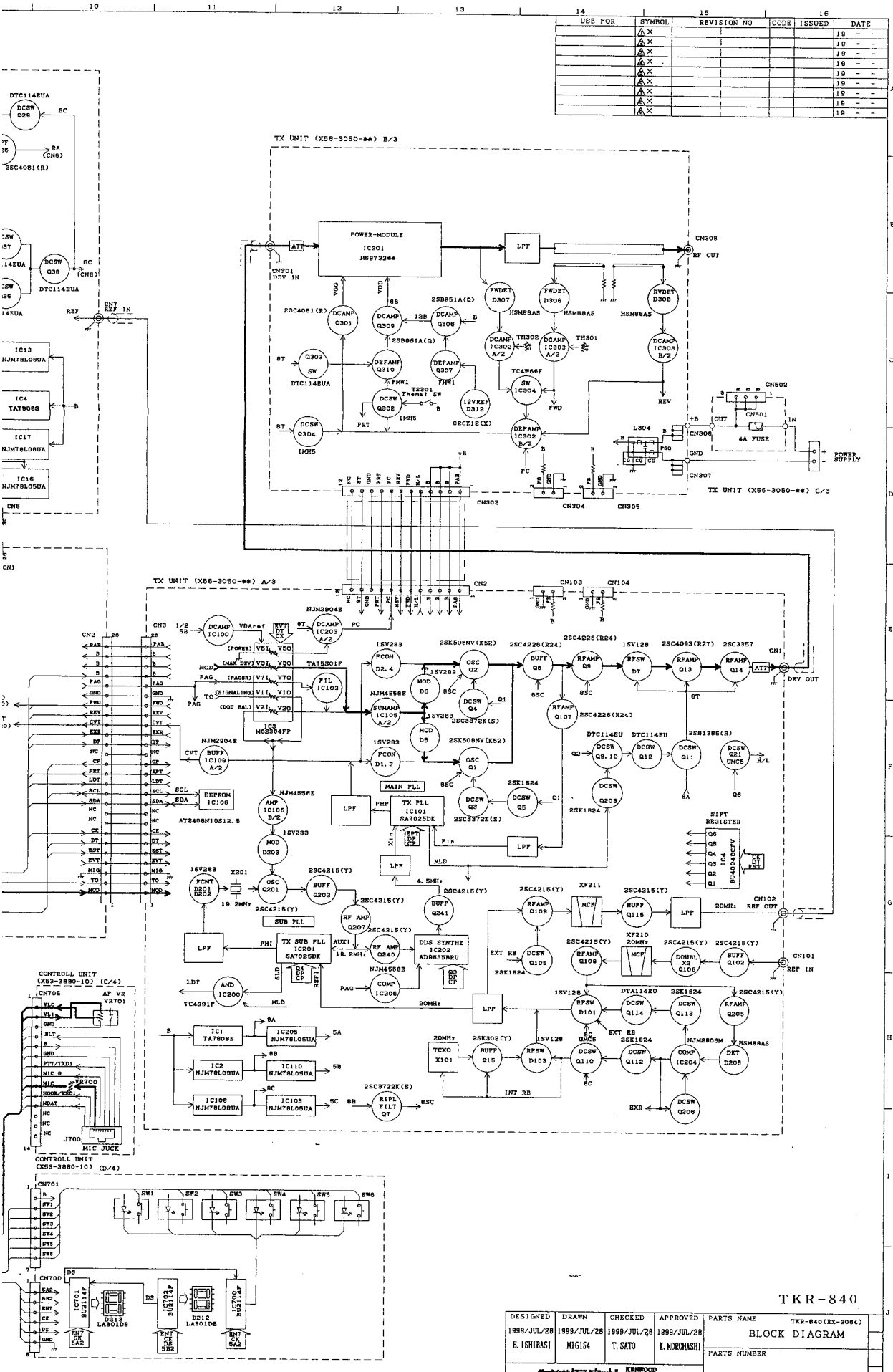

DESIGNED	DRAWN	CHECKED	APPROVED	PARTS NAME
1999/JUL/28	1999/JUL/28	1999/JUL/28	1999/JUL/28	TKR-840(EX-3064) BLOCK DIAGRAM
E. ISHIBASI	M1G154	T. SATO	K. MOROHASHI	PARTS NUMBER

株式会社ケンウッド KENWOOD CORPORATION