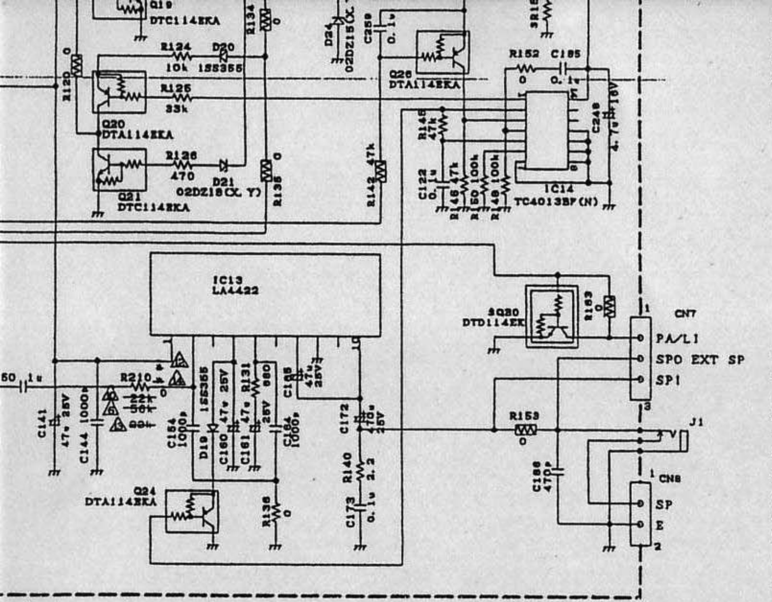

3-05	3SK228	DTC144EKA	L72-0959	L72-0973	1k	5.6	1k					-	-	-	-	5p	18p	-	6p	-	-	150
2-73	SGM2014AM	-	-	L72-0973	1k	5.6	1k					-	-	-	-	5p	18p	-	6p	-	-	150
2-74	SGM2014AM	-	-	L72-0959	1k	5.6	1k					-	-	-	-	5p	18p	-	6p	-	-	150
~~0-17~~	~~3SK228~~	~~DTC144EKA~~	~~L72-0959~~	~~L72-0973~~	~~330~~	~~18~~	~~330~~					~~0~~	~~0~~	~~0~~	~~1.5p~~					~~1000p~~	~~10p~~	-
0-18	3SK228	DTC144EKA	L72-0959	L72-0973	330	18	330					-	-	-	-	5p	18p	3p	6p	-	-	150
3-07	3SK228	DTC144EKA	L72-0959	L72-0973	330	18	330					-	-	-	-	5p	18p	3p	8p	-	-	150

	C283	C284	C285	C286	C287	C288	R19	R23	R28	R30	R32	R38	R39	R42	R45	R46	R165	R203	D8	D10	D50	D51	D52	D53	Q3	Q4
0-10	-	-	-	-	-	-	3.9k	22k	-	10k	10k	10k	10k	47k	-	22k	-	-	DAN235K	DAN235K	-	-	-	-	DTA114EKA	DTC114EKA
0-11	-	-	-	-	-	-	3.9k	22k	-	10k	10k	10k	10k	47k	-	22k	-	-	DAN235K	DAN235K	-	-	-	-	DTA114EKA	DTC114EKA
3-01	-	-	-	-	-	-	3.9k	22k	-	10k	10k	10k	10k	47k	-	22k	-	-	DAN235K	DAN235K	-	-	-	-	DTA114EKA	DTC114EKA
3-02	-	-	-	-	-	-	3.9k	22k	-	10k	10k	10k	10k	47k	-	22k	-	-	DAN235K	DAN235K	-	-	-	-	DTA114EKA	DTC114EKA
0-14	-	-	-	-	-	-	3.9k	22k	-	10k	10k	10k	10k	47k	-	22k	-	-	DAN235K	DAN235K	-	-	-	-	DTA114EKA	DTC114EKA
3-03	-	-	-	-	-	-	3.9k	22k	-	10k	10k	10k	10k	47k	-	22k	-	-	DAN235K	DAN235K	-	-	-	-	DTA114EKA	DTC114EKA
3-04	-	-	-	-	-	-	3.9k	22k	-	10k	10k	10k	10k	47k	-	22k	-	-	DAN235K	DAN235K	-	-	-	-	DTA114EKA	DTC114EKA
2-71	22p	22p	22p	220p	220p	220p	-	-	0	-	-	-	-	22k	0	-	3.3k	3.9k	-	-	1SV280	1SV280	1SV280	1SV280	-	-
2-72	22p	22p	22p	220p	220p	220p	-	-	0	-	-	-	-	22k	0	-	3.3k	3.9k	-	-	1SV280	1SV280	1SV280	1SV280	-	-
0-12	-	-	-	-	-	-	3.9k	22k	-	10k	10k	10k	10k	47k	-	22k	-	-	DAN235K	DAN235K	-	-	-	-	DTA114EKA	DTC114EKA
0-13	-	-	-	-	-	-	3.9k	22k	-	10k	10k	10k	10k	47k	-	22k	-	-	DAN235K	DAN235K	-	-	-	-	DTA114EKA	DTC114EKA
0-15	-	-	-	-	-	-	3.9k	22k	-	10k	10k	10k	10k	47k	-	22k	-	-	DAN235K	DAN235K	-	-	-	-	DTA114EKA	DTC114EKA
0-16	-	-	-	-	-	-	3.9k	22k	-	10k	10k	10k	10k	47k	-	22k	-	-	DAN235K	DAN235K	-	-	-	-	DTA114EKA	DTC114EKA
3-05	-	-	-	-	-	-	3.9k	22k	-	10k	10k	10k	10k	47k	-	22k	-	-	DAN235K	DAN235K	-	-	-	-	DTA114EKA	DTC114EKA
2-73	22p	22p	22p	220p	220p	220p	-	-	0	-	-	-	-	22k	0	-	3.3k	3.9k	-	-	1SV280	1SV280	1SV280	1SV280	-	-
2-74	22p	22p	22p	220p	220p	220p	-	-	0	-	-	-	-	22k	0	-	3.3k	3.9k	-	-	1SV280	1SV280	1SV280	1SV280	-	-
0-17	-	-	-	-	-	-	3.9k	22k	-	10k	10k	10k	10k	47k	-	22k	-	-	DAN235K	DAN235K	-	-	-	-	DTA114EKA	DTC114EKA
0-18	-	-	-	-	-	-	3.9k	22k	-	10k	10k	10k	10k	47k	-	22k	-	-	DAN235K	DAN235K	-	-	-	-	DTA114EKA	DTC114EKA
3-07	-	-	-	-	-	-	3.9k	22k	-	10k	10k	10k	10k	47k	-	22k	-	-	DAN235K	DAN235K	-	-	-	-	DTA114EKA	DTC114EKA

C273	C274	L13. L22	L14	L19	L20	L27	L35	D43	CN6	X58-4670 (A1)	R180	C125	C77	L7	R99	C111	C263
1u	-	L79-1585-05	18n	56n	18n	15n	-	HTZJ18	-	0-12	5.6k	2.2u/6.3V	22u/16V (C92-0561-05)	~~680~~→560n	~~270~~330	~~4~~→3p	~~4p~~→-
1u	-	L79-1585-05	18n	56n	18n	15n	-	HTZJ18	-	0-12	5.6k	2.2u/6.3V	22u/16V (C92-0561-05)	~~680~~→560n	~~270~~330	~~4~~→3p	~~4p~~→-
1u	-	L79-1585-05	18	56n	18n	15n	-	HTZJ18	E40-5751-05	0-12	5.6k	2.2u/6.3V	22u/16V (C92-0561-05)	~~680~~→560n	~~270~~330	~~4~~→3p	~~4p~~→-
1u	-	L79-1585-05	18n	56n	18n	15n	-	HTZJ18	E40-5751-05	0-12	5.6k	2.2u/6.3V	22u/16V (C92-0561-05)	~~680~~→560n	~~270~~330	~~4~~→3p	~~4p~~→-
-	5p	L79-1591-05	27n	100n	27n	18n	27n	-	-	0-14	33k	1u/16V	~~22u/10V (C92-3046-05)~~ -	560n	330	3p	-
-	5p	L79-1591-05	27n	100n	27n	18n	27n	-	E40-5751-05	0-14	33k	1u/16V	~~22u/10V (C92-3046-05)~~ -	560n	330	3p	-
-	5p	L79-1591-05	27n	100n	27n	18n	27n	-	E40-5751-05	0-14	33k	1u/16V	~~22u/10V (C92-3046-05)~~ -	560n	330	3p	-
	-	L79-1750-05	18n	56n	18n	15n	-		-	0-15	5.6k	2.2u/6.3V	22u/16V (C92-0561-05)	680n	220	4p	4p
	-	L79-1750-05	18n	56n	18n	15n	-		-	0-15	5.6k	2.2u/6.3V	22u/16V (C92-0561-05)	680n	220	4p	4p
	-	L79-1169-05	27n	47n	-	-	-		-	0-13	5.6k	2.2u/6.3V	22u/16V (C92-0561-05)	560n	330	3p	-
	-	L79-1169-05	27n	47n	-	-	-		-	0-13	5.6k	2.2u/6.3V	22u/16V (C92-0561-05)	560n	330	3p	-
	-	L79-1585-05	18n	56n	18n	15n	-	HTZJ18	-	0-12	5.6k	1u/16V	-	560n	330	3p	-
	-	L79-1585-05	18n	56n	18n	15n	-	HTZJ18	-	0-12	5.6k	1u/16V	-	560n	330	3p	-
	-	L79-1585-05	18	56n	18n	15n	-	HTZJ18	E40-5751-05	0-12	5.6k	1u/16V	-	560n	330	3p	-
	-	L79-1750-05	18n	56n	18n	15n	-		-	0-15	5.6k	2.2u/6.3V	22u/16V (C92-0561-05)	680n	220	4p	4p
	-	L79-1750-05	18n	56n	18n	15n	-		-	0-15	5.6k	2.2u/6.3V	22u/16V (C92-0561-05)	680n	220	4p	4p
	-	L79-1169-05	27n	47n	-	-	-		-	0-13	2.7k	2.2u/6.3V	-	560n	330	3p	-
	5p	L79-1591-05	27n	100n	27n	18n	27n		-	0-14	2.7k	1u/16V	-	560n	330	3p	-
	5p	L79-1591-05	27n	100n	27n	18n	27n		E40-5751-05	0-14	2.7k	1u/16V	-	560n	330	3p	-

C241	C243	C265	C275	C72	C126	C179	C180	C182	C184	C228	C230	C231	C233	C235	C242	C251	C252	C267	C278	C280	C281	C282
-	-	-	-	4.7u6.3V	12p	470p	-	-	-	-	0.1u	0.1u	-	-	-	-	-	-	-	-	-	-
-	-	-	-	4.7u6.3V	12p	470p	-	-	-	-	0.1u	0.1u	-	-	-	-	-	-	-	-	-	-
-	-	-	-	4.7u6.3V	12p	470p	-	-	-	-	0.1u	0.1u	-	-	-	-	-	-	-	-	-	-
-	-	-	-	4.7u6.3V	12p	470p	-	-	-	-	0.1u	0.1u	-	-	-	-	-	-	-	-	-	-
1000p	1000p	1000p	1000p	4.7u6.3V	12p	470p	-	-	-	-	0.1u	0.1u	-	-	-	-	-	-	-	-	-	-
1000p	1000p	1000p	1000p	4.7u6.3V	12p	470p	-	-	-	-	0.1u	0.1u	-	-	-	-	-	-	-	-	-	-
1000p	1000p	1000p	1000p	4.7u6.3V	12p	470p	-	-	-	-	0.1u	0.1u	-	-	-	-	-	-	-	-	-	-
220p	-	220p	-	4.7u6.3V	18p	220p	1p	220p	0.1u	10p	-	-	82p	82p	22p	22p	22p	220p	22p	22p	22p	22p
220p	-	220p	-	-	18p	220p	1p	220p	0.1u	10p	-	-	82p	82p	22p	22p	22p	220p	22p	22p	22p	22p
1000p	1000p	1000p	1000p	4.7u6.3V	12p	470p	-	1000p	-	-	0.1u	0.1u	-	-	-	-	-	-	-	-	-	-
1000p	1000p	1000p	1000p	4.7u6.3V	12p	470p	-	1000p	-	-	0.1u	0.1u	-	-	-	-	-	-	-	-	-	-
-	-	1000p	1000p	4.7u6.3V	12p	470p	-	-	-	-	0.1u	0.1u	-	-	-	-	-	1000p	-	-	-	-
-	-	1000p	1000p	4.7u6.3V	12p	470p	-	-	-	-	0.1u	0.1u	-	-	-	-	-	1000p	-	-	-	-
-	-	1000p	1000p	4.7u6.3V	12p	470p	-	-	-	-	0.1u	0.1u	-	-	-	-	-	1000p	-	-	-	-
220p	-	220p	-	4.7u6.3V	18p	220p	1p	220p	0.1u	10p	-	-	82p	82p	22p	22p	22p	220p	22p	22p	22p	22p
220p	-	220p	-	-	18p	220p	1p	220p	0.1u	10p	-	-	82p	82p	22p	22p	22p	220p	22p	22p	22p	22p
1000p	1000p	1000p	1000p	4.7u6.3V	12p	470p	-	1000p	-	-	0.1u	0.1u	-	-	-	-	-	-	-	-	-	-
1000p	1000p	1000p	1000p	4.7u6.3V	12p	470p	-	-	-	-	0.1u	0.1u	-	-	-	-	-	-	-	-	-	-
1000p	1000p	1000p	1000p	4.7u6.3V	12p	470p	-	-	-	-	0.1u	0.1u	-	-	-	-	-	-	-	-	-	-

L26	C290	R48	C276	C258	R132	R166	R181
33n	-	330k	-	-	0	150	5.6k
33n	-	330k	-	-	0	150	5.6k
33n	-	330k	-	-	0	150	5.6k
33n	-	330k	-	-	0	150	5.6k
33n	-	330k	22u/10V (C90-2048-05)	-	0	150	5.6k
33n	-	330k	22u/10V (C90-2048-05)	-	0	150	5.6k
33n	-	330k	22u/10V (C90-2048-05)	-	0	150	5.6k
33n	-	330k	-	-	0	150	5.6k
33n	-	330k	-	-	0	150	5.6k
-	1u 16V	180k	-	-	0	150	5.6k
-	1u 16V	180k	-	-	0	150	5.6k
33n	1u 16V		22u/10V (C90-2048-05)	-	0	150	5.6k
33n	1u 16V		22u/10V (C90-2048-05)	-	0	150	5.6k
33n	1u 16V		22u/10V (C90-2048-05)	-	0	150	5.6k
33n	-		-	-	0	150	5.6k
33n	-		-	-	0	150	5.6k
-	1u 16V		22u/10V (C90-2048-05)	1000p	12	180	3.3k
33n	-		22u/10V (C90-2048-05)	1000p	0	150	10k
33n	-		22u/10V (C90-2048-05)	1000p	0	150	10k

~~#1:This pattern is conected in the line except type S.~~
~~#2:This pattern is conected in the line.~~

DESIGNED	DRAWN	CHECKED	APPROVED	PARTS NAME
	08/AUG/2000 T. MATUOKA	08/AUG/2000 T. OONUKI	08/AUG/2000 K. KADOWAKI	SCHEMATIC DIAGRAM
株式会社ケンウッド KENWOOD CORPORATION				PARTS NUMBER Z92-0700-01 1/1 21 S