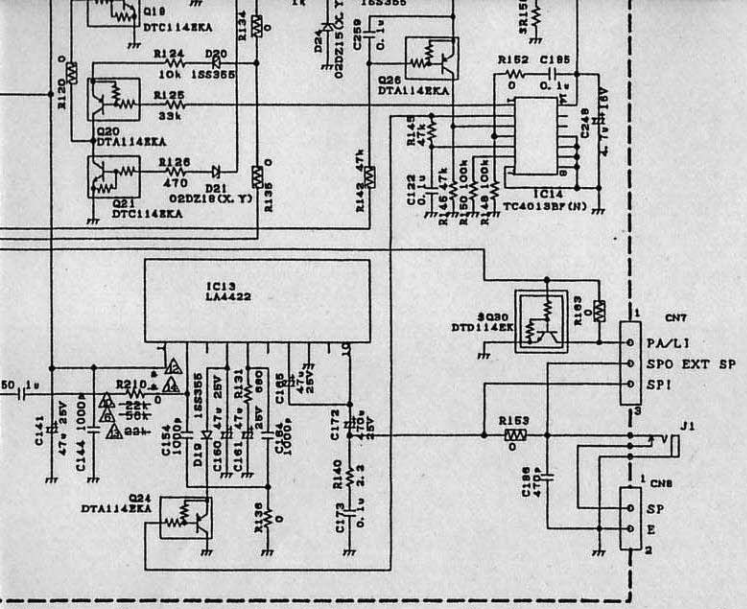
Q19
DTC114EKA
R124
10k
1SS355
D20
R134
0
R125
33k
Q20
DTA114EKA
R120
0
R136
470
D21
02DZ18(X, Y)
Q21
DTC114EKA
R135
0
R142
47k
D24
02DZ15(X, Y)
C259
0.1u
Q26
DTA114EKA
R152
0
C185
0.1u
R145
47k
R146
50
R148
100k
C122
0.1u
IC14
TC4013BF(N)
C249
4.7u 16V
IC13
LA4422
Q30
DTD114EK
R163
CN7
PA/LI
SPO EXT SP
SPI
R153
0
J1
CN8
SP
E
C186
470p
R210
22k
50k
Q31
C141
47u 25V
C144
1000p
C154
1000p
D12
1SS355
C160
47u 25V
C161
47u
R131
680
25V
C164
1000p
C165
47u
25V
C172
470u
25V
R140
2.2
C173
0.1u
Q24
DTA114EKA
R138
0
C50
1u

| | | |