Type	IC400
0-10, 0-11, 0-21, 3-01, 3-02 2-71, 2-72, 2-73	M67741H-32
0-12, 0-13, 3-03, 3-04	M67741L-35
0-14, 0-15, 3-05	M68702H
0-16, 0-17, 3-06	M68702L

USE FOR	SYMBOL	REVISION NO		CODE	ISSUED	DATE
X57-595*-**	X 7	33905	33953		T. Matsuoka	99-08-20
	X 3	34068			T. Matsuoka	99-08-26
	X 3	34168	34190		T. Matsuoka	99-09-02
	X 28	改掛設完			T. Matsuoka	99-09-21
	X 4	34692			W. FUKIYA	99-09-28
	X 1	34992			W. FUKIYA	99-10-20
	X 18	35137			T. Matsuoka	99-10-26
	X 2	35311			W. FUKIYA	99-11-08
	X 71	改掛設完			T. KOBAYASHI	99-11-25
	X 4	35632			W. FUKIYA	1999-12-06
	X 5	35689			W. FUKIYA	1999-12-09
	X 19	35831			T. ONUKI	2000-01-07
	X 2	36295	36382		T. Matsuoka	2000-02-01
	X 25	36590			T. Matsuoka	2000-02-19
	X 32	改掛追加			Y. KUBO	2000-03-28
	X 22	37645	37814		W. FUKIYA	2000-05-15
	X 10	37841			W. FUKIYA	2000-05-16
	X 2	37985			T. Matsuoka	2000-05-22
	X 34	改掛追加			Y. KUBO	2000-06-22
	X					
	X					

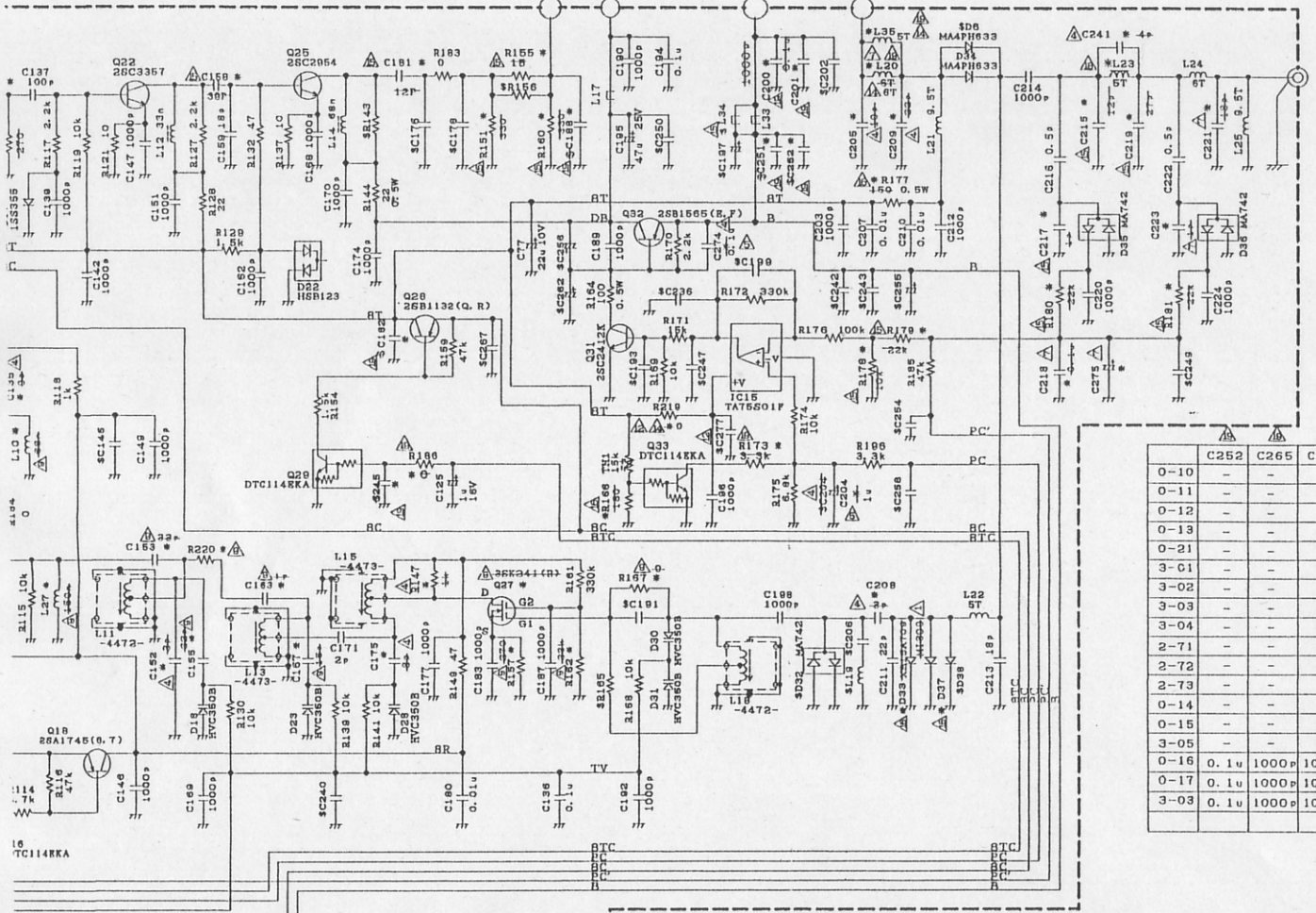

	C252	C265	C276	R173	R186
0-10	–	–	–	3.3k	0
0-11	–	–	–	3.3k	0
0-12	–	–	–	3.3k	0
0-13	–	–	–	3.3k	0
0-21	–	–	–	3.3k	0
3-01	–	–	–	3.3k	0
3-02	–	–	–	3.3k	0
3-03	–	–	–	3.3k	0
3-04	–	–	–	3.3k	0
2-71	–	–	–	3.3k	0
2-72	–	–	–	3.3k	0
2-73	–	–	–	3.3k	0
0-14	–	–	–	3.3k	0
0-15	–	–	–	3.3k	0
3-05	–	–	–	3.3k	0
0-16	0.1u	1000p	1000p	2.2k	10
0-17	0.1u	1000p	1000p	2.2k	10
3-03	0.1u	1000p	1000p	2.2k	10

	C158	C181	C215	C217	C219	D26	D29	L34	R178	R179	R180	R181	R166	R177	D33	D37	L23	C182	C188	C200	C201	C245	C251
0-10	39P	12P	12P	1P	27P	–	DSM3MA1	–	10K	22K	22K	22K	180	150	XB15A709	–	-0742-	–	–	1000p	0.1u	–	–
0-11	39P	12P	12P	1P	27P	–	DSM3MA1	–	10K	22K	22K	22K	180	150	XB15A709	–	-0742-	–	–	1000p	0.1u	–	–
0-12	39P	12P	12P	1P	27P	–	DSM3MA1	–	10K	22K	22K	22K	180	150	XB15A709	–	-0742-	–	–	1000p	0.1u	–	–
0-13	39P	12P	12P	1P	27P	–	DSM3MA1	–	10K	22K	22K	22K	180	150	XB15A709	–	-0742-	–	–	1000p	0.1u	–	–
0-21	39P	12P	12P	1P	27P	–	DSM3MA1	–	10K	22K	22K	22K	180	150	XB15A709	–	-0742-	–	–	1000p	0.1u	–	–
3-01	39P	12P	12P	1P	27P	–	DSM3MA1	–	10K	22K	22K	22K	180	150	XB15A709	–	-0742-	–	–	1000p	0.1u	–	–
3-02	39P	12P	12P	1P	27P	–	DSM3MA1	–	10K	22K	22K	22K	180	150	XB15A709	–	-0742-	–	–	1000p	0.1u	–	–
3-03	39P	12P	12P	1P	27P	–	DSM3MA1	–	10K	22K	22K	22K	180	150	XB15A709	–	-0742-	–	–	1000p	0.1u	–	–
3-04	39P	12P	12P	1P	27P	–	DSM3MA1	–	10K	22K	22K	22K	180	150	XB15A709	–	-0742-	–	–	1000p	0.1u	–	–
2-71	39P	12P	12P	1P	27P	–	DSM3MA1	–	10K	22K	22K	22K	180	150	XB15A709	–	-0742-	–	–	1000p	0.1u	–	–
2-72	39P	12P	12P	1P	27P	–	DSM3MA1	–	10K	22K	22K	22K	180	150	XB15A709	–	-0742-	–	–	1000p	0.1u	–	–
2-73	39P	12P	12P	1P	27P	–	DSM3MA1	–	10K	22K	22K	22K	180	150	XB15A709	–	-0742-	–	–	1000p	0.1u	–	–
0-14	27P	39P 27P	10P	0-6P 1P	18P	DSA3A1-FK	–	L92-0179-05	6-6K 8.2K	39K	3.3K	5.6K	220	120	–	XB15A709	-4655-	–	–	1000p	0.1u	–	–