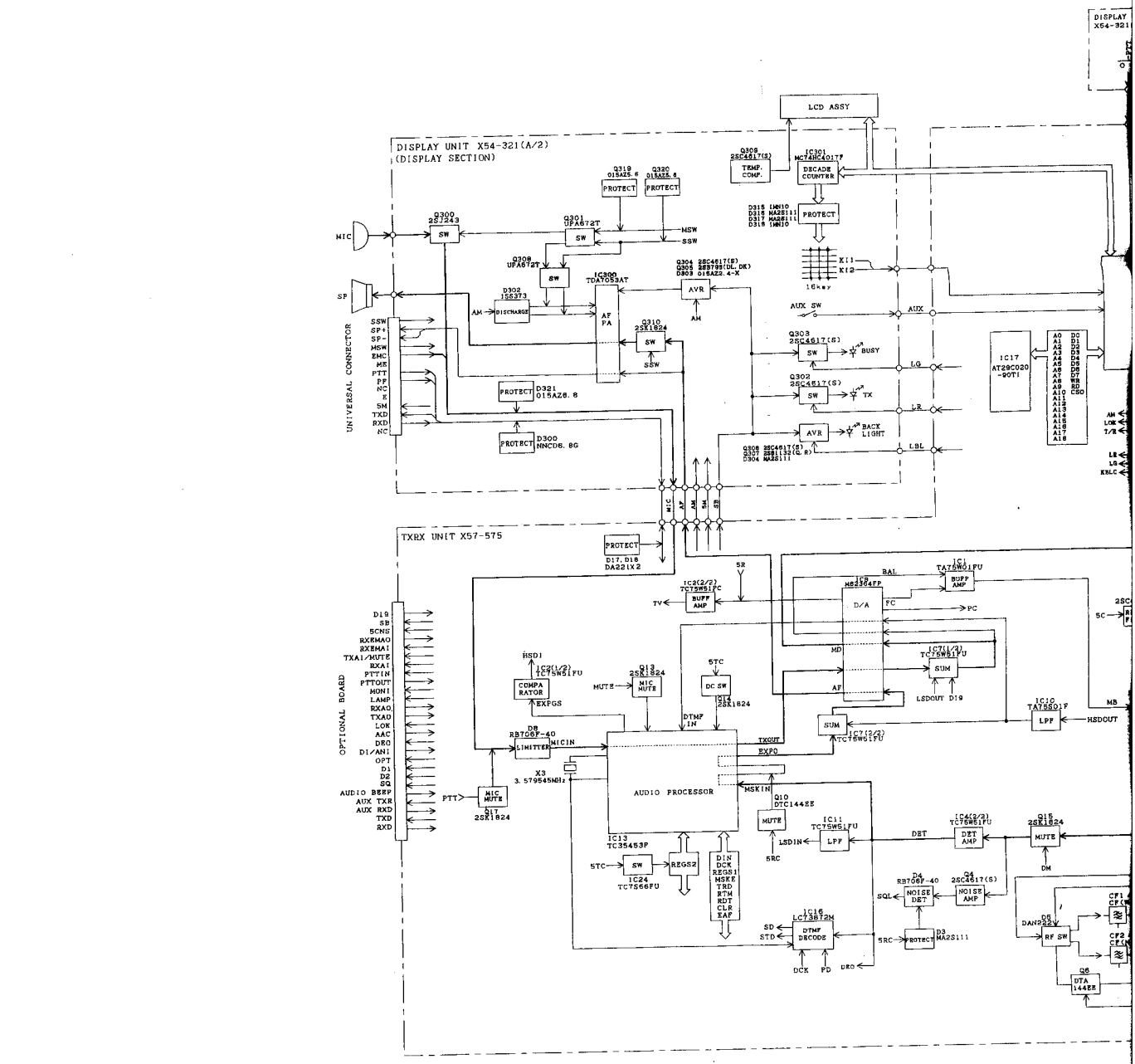
DISPLAY UNIT X54-321(A/2)
(DISPLAY SECTION)
LCD ASSY
TXRX UNIT X57-575
UNIVERSAL CONNECTOR
OPTIONAL BOARD
MIC
SP
Q300 2SJ243 SW
Q301 UPA672T SW
Q309 UPA672T SW
PROTECT
Q319 015AZ5.6
Q320 015AZ5.6
MSW
SSW
IC300 TDA7053AT
AF PA
AVR
Q310 2SK1824 SW
D302 1SS373
DISCHARGE
AM
Q304 2SC4617(S)
Q305 2SD798(DL,DK)
D303 015AZ2.4-X
Q308 2SC4617(S)
TEMP. COMP.
IC301 MC74HC4017F
DECADE COUNTER
D315 1N4010
D316 MA2S111
D317 MA2S111
D318 1N4010
X11
X12
16key
AUX SW
AUX
Q303 2SC4617(S) SW
BUSY
LG
Q302 2SC4617(S) SW
TX
LR
AVR
BACK LIGHT
LBL
Q308 2SC4617(S)
Q307 2SB1132(L,R)
D304 MA2S111
IC17 AT29C020 -90TI
A0 A1 A2 A3 A4 A5 A6 A7 A8 A9 A10 A11 A12 A13 A14 A15 A16 A17 A18
D0 D1 D2 D3 D4 D5 D6 D7 WR RD CSO
AM
LOK
T/R
LB
LG
KBLC
D300 NNCD6.8G
D321 015AZ6.8
D17,D18 DA221X2
IC2(2/2) TC75W51FC BUFF AMP
TV
5R
IC8 M62304FP D/A
BAL
IC1 TA75W01FU BUFF AMP
FC
PC
SC
MB
MD
AF
IC7(1/2) TC75W51FU SUM
LSDOUT D19
IC10 TA75S01F LPF
HSDOUT
SUM IC7(2/2) TC75W51FU
HSDI
IC9(1/2) TC75W51FU COMPA RATOR
EXPGS
Q13 2SK1824 MIC MUTE
MUTE
5TC
DC SW
Q14 2SK1824
DTMF IN
D8 RB706F-40 LIMITER
MICIN
TXOUT
EXPO
X3 3.579545MHz
AUDIO PROCESSOR
MSKIN
PTT
MIC MUTE
Q17 2SK1824
Q10 DTC144EE MUTE
IC11 TC75W51FU LPF
LSDIN
5RC
IC13 TC35453P
5TC
SW
IC24 TC7566FU
REGS2
DIN DCK REGS1 MSKE TRD RTM RDT CLR EAF
IC16 LC73872M DTMF DECODE
SD
STD
DCK
PD
DEO
DET
IC4(2/3) TC75W51FU DET AMP
Q15 2SK1824 MUTE
DM
D4 RB706F-40 NOISE DET
SQL
Q4 2SC4617(S) NOISE AMP
D3 MA2S111 PROTECT
D5 DAN222 RF SW
CF1
CF2
Q6 DTA144EE

USE FOR	SYMBOL	REVISION NO	CODE	ISSUED	DATE
	A X				19 - -
	A X				19 - -
	A X				19 - -
	A X				19 - -
	A X				19 - -
	A X				19 - -
	A X				19 - -
	A X				19 - -
	A X				19 - -
	A X				19 - -

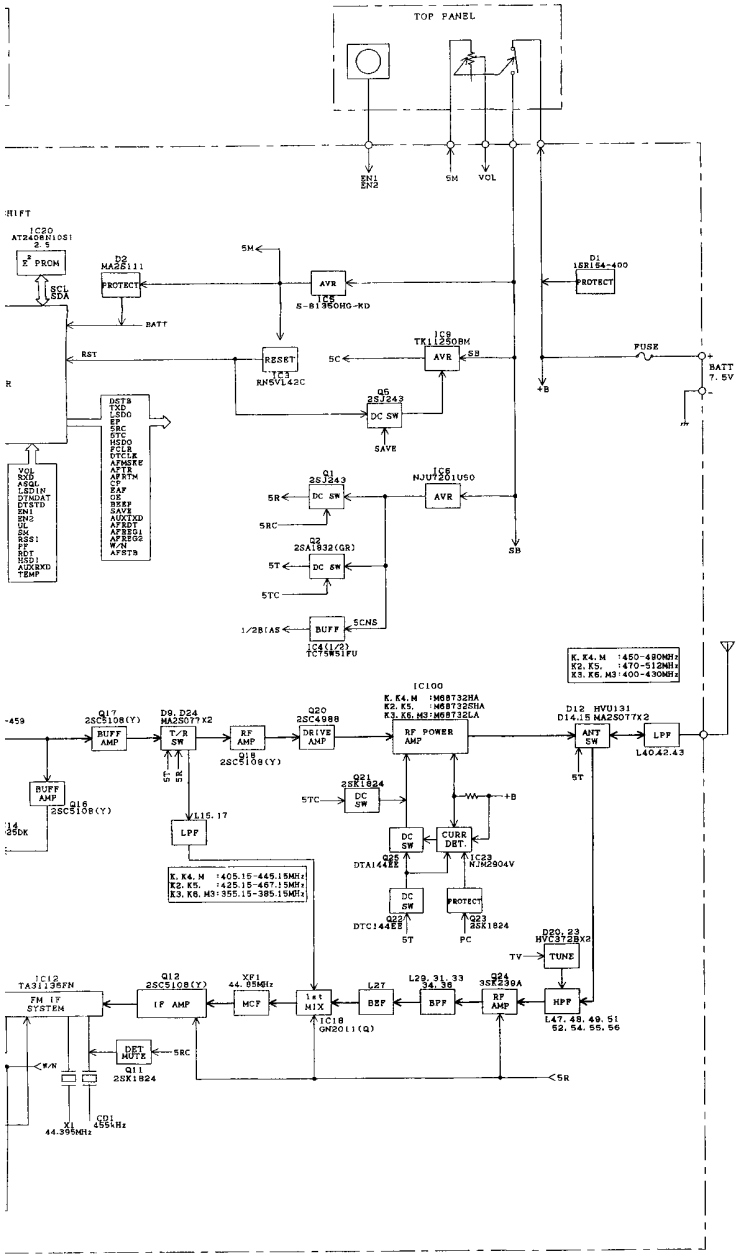

DESIGNED	DRAWN	CHECKED	APPROVED	PARTS NAME
				BLOCK DIAGRAM
株式会社ケンウッド KENWOOD CORPORATION				PARTS NUMBER TK-380