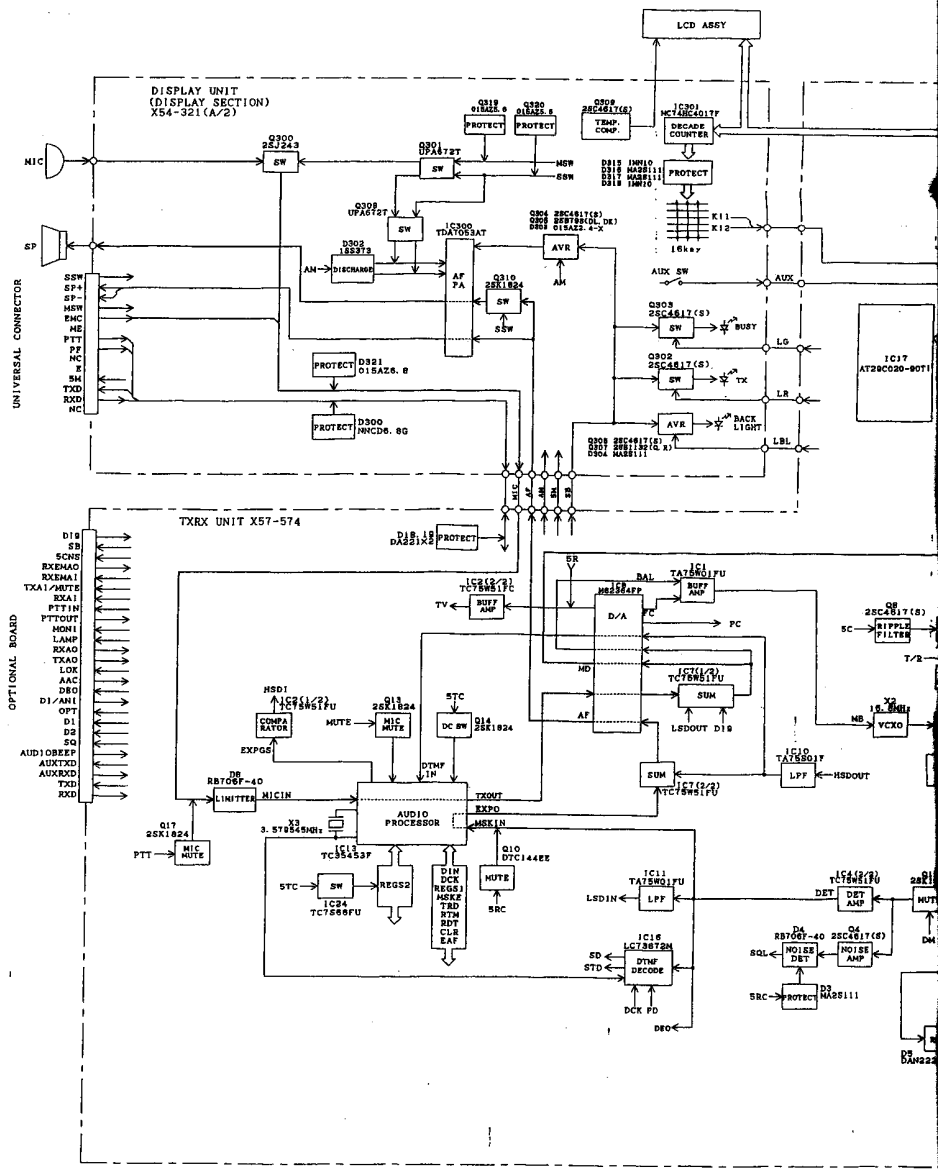
LCD ASSY
DISPLAY UNIT
(DISPLAY SECTION)
X54-321(A/2)
MIC
SP
UNIVERSAL CONNECTOR
SSW
SP+
SP-
MSW
EMC
ME
PTT
PF
NC
E
SH
TXD
RXD
NC
Q300
2SJ243
SW
Q301
UPA672T
MSW
SSW
Q309
UPA672T
D302
1SS373
AM
DISCHARGE
IC300
TDA7053AT
AF
PA
Q310
2SK1824
SW
SSW
Q304 2SC4617(S)
Q305 2SB709(CL,DE)
D303 DZ15AZ2.4-X
AVR
AM
Q318
DZ15AZ5.6
PROTECT
Q320
DZ15AZ5.6
PROTECT
Q308
2SC4617(S)
TEMP.
COMP.
IC301
MC74HC4017F
DECADE
COUNTER
D315 1NN10
D316 MA2S111
D317 MA2S111
D318 1NN10
PROTECT
K11
K12
16key
AUX SW
AUX
Q303
2SC4617(S)
SW
BUSY
LG
Q302
2SC4617(S)
SW
TX
LR
AVR
BACK
LIGHT
Q308 2SC4617(S)
Q307 2SB1132(G,H)
Q304 MA2S111
LBL
IC17
AT28C020-90TI
PROTECT
D321
DZ15AZ6.8
PROTECT
D300
1NNCD5.8G
MIC
AF
AM
SW
SS
TXRX UNIT X57-574
D18,19
DA221X2
PROTECT
OPTIONAL BOARD
D19
SB
SCNS
RXEMAO
RXEMAI
TXA1/MUTE
EXA1
PTTIN
PTTOUT
MONI
LAMP
RXAO
TXAO
LOK
AAC
DEO
DI/ANI
OPT
D1
D2
SQ
AUDIOBEEP
AUXTXD
AUXRXD
TXD
RXD
IC2(2/3)
TC75W51FC
BUFF
AMP
TV
IC1
TA75W01FU
BUFF
AMP
BAL
IC8
M62364FP
D/A
FC
PC
5R
Q8
2SC4617(S)
RIPPLE
FILTER
5C
T/2
IC7(1/2)
TC75W51FU
SUM
MD
AF
LSDOUT D19
X2
16.8MHz
VCXO
MB
IC9(1/2)
TC75W51FU
COMPA
RATOR
HSDI
EXPGS
Q13
2SK1824
MIC
MUTE
MUTE
Q14
2SK1824
DC SW
5TC
DTMF
IN
IC10
TA75S01F
LPF
HSDOUT
SUM
IC7(2/2)
TC75W51FU
D6
RB706F-40
LIMITTER
MICIN
AUDIO
PROCESSOR
TXOUT
EXPO
MSKIN
X3
3.579545MHz
IC13
TC35453F
Q17
2SK1824
MIC
MUTE
PTT
5TC
SW
IC24
TC7S66FU
REGS2
DIN
DCK
REGS1
MSKE
TRD
RTM
RDT
CLR
EAF
Q10
DTC144EE
MUTE
5RC
IC11
TA75W01FU
LPF
LSDIN
IC16
LC73872M
DTMF
DECODE
SD
STD
DCK PD
DEO
IC4(2/3)
TC75W51FU
DET
AMP
DET
D4
RB706F-40
NOISE
DET
SQL
Q4
2SC4617(S)
NOISE
AMP
D3
MA2S111
PROTECT
5RC
D2
DAN222

USE FOR	SYMBOL	REVISION NO	CODE	ISSUED	DATE
	⚠ X				19 - -
	⚠ X				19 - -
	⚠ X				19 - -
	⚠ X				19 - -
	⚠ X				19 - -
	⚠ X				19 - -
	⚠ X				19 - -
	⚠ X				19 - -
	⚠ X				19 - -

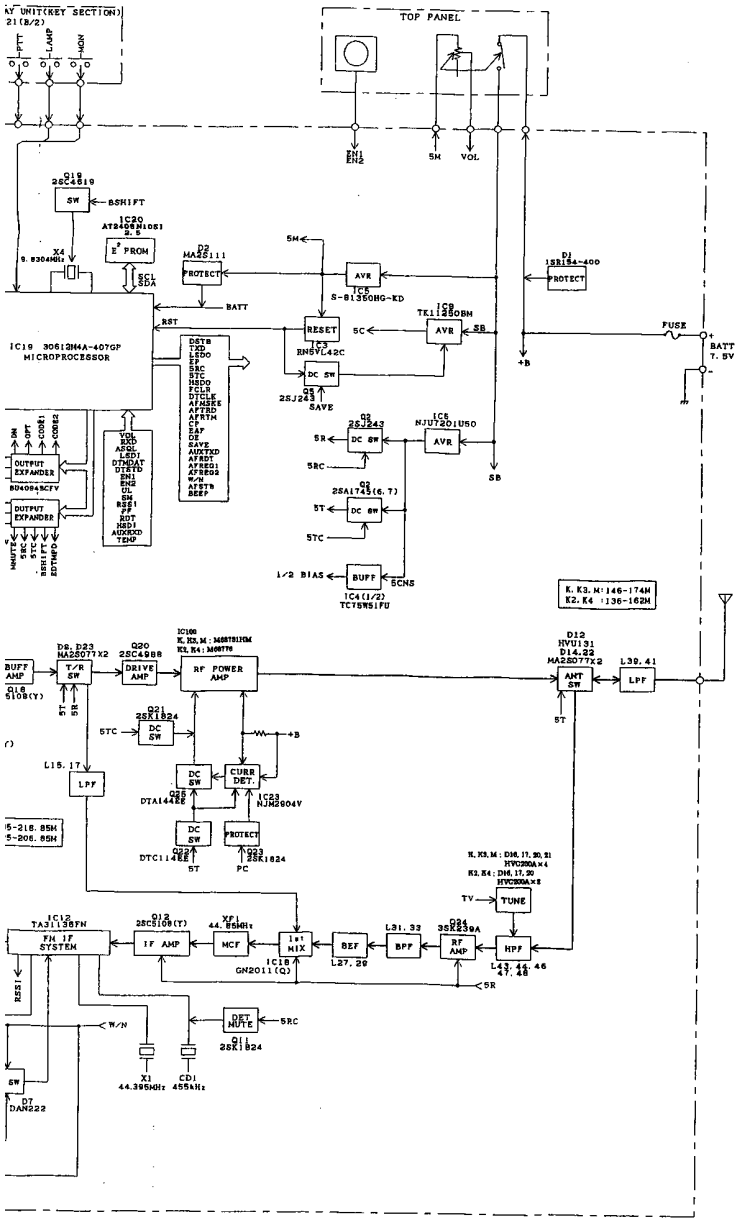

FCCID:ALH24613120

DESIGNED	DRAWN	CHECKED	APPROVED	PARTS NAME
				BLOCK DIAGRAM
				PARTS NUMBER
株式会社ケンウッド KENWOOD CORPORATION				TK-280