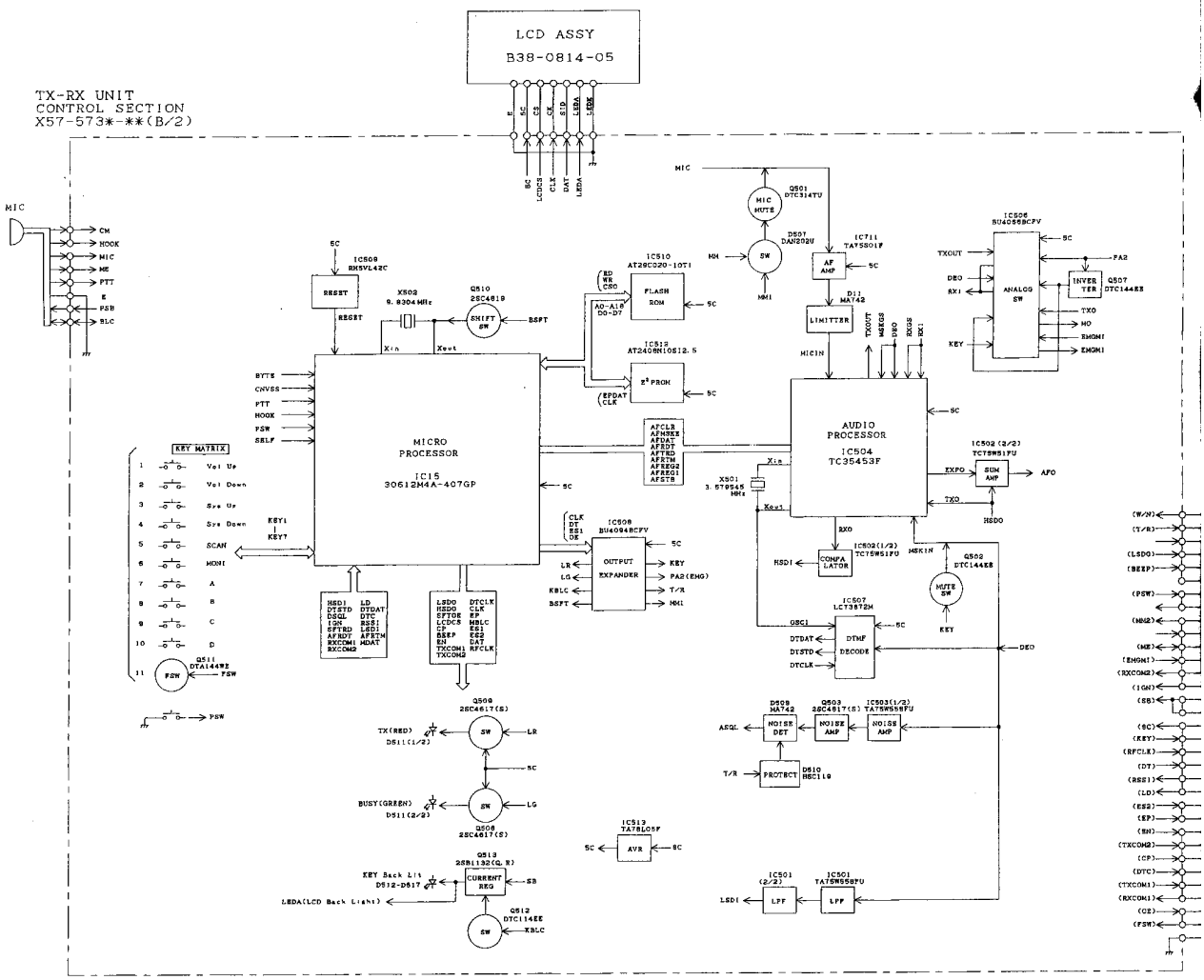
LCD ASSY
B38-0814-05
TX-RX UNIT
CONTROL SECTION
X57-573*-**(B/2)
MICROPROCESSOR
IC15
30612M4A-407GP
AUDIO PROCESSOR
IC504
TC35453F
FLASH ROM
IC510
AT29C020-10TI
IC512
AT24C08N(512.5
IC506
BU4053BCFV
ANALOG SW
IC508
BU4094BCFV
OUTPUT EXPANDER
IC507
LC73872M
DTMF DECODER
IC509
RHSVL42C
RESET
IC511
TA75S01F
AF AMP
IC513
TA78L05F
AVR
IC501
TA75W558FU
LPF
IC502(1/2)
TC75W51FU
COMPA LATOR
IC502(2/2)
TC75W51FU
SUM AMP
IC503(1/2)
TA75W558FU
NOISE AMP
KEY MATRIX
Vol Up
Vol Down
Sys Up
Sys Down
SCAN
MONI
A
B
C
D
FSW
MIC
CM
HOOK
PTT
E
PSB
SLC
MIC MUTE
SW
LIMITTER
MUTE SW
NOISE DET
PROTECT
CURRENT REG
LED(LCD Back Light)
KEY Back Lit
TX(RED)
BUSY(GREEN)
LSDI
ASQL
T/R
KEY
PA2(ENG)
MMI
MSDO
AFO
EXPO
TXO
RXO
DEO
MIC1N
XSLC
SB
LR
LG
BSFT
RESET
SC

USE FOR	SYMBOL	REVISION NO	CODE	ISSUED	DATE
	⚠X				19 - -
	⚠X				19 - -
	⚠X				19 - -
	⚠X				19 - -
	⚠X				19 - -
	⚠X				19 - -
	⚠X				19 - -
	⚠X				19 - -
	⚠X				19 - -

:-RX UNIT
:-RX SECTION
57-573*-**(A/2)

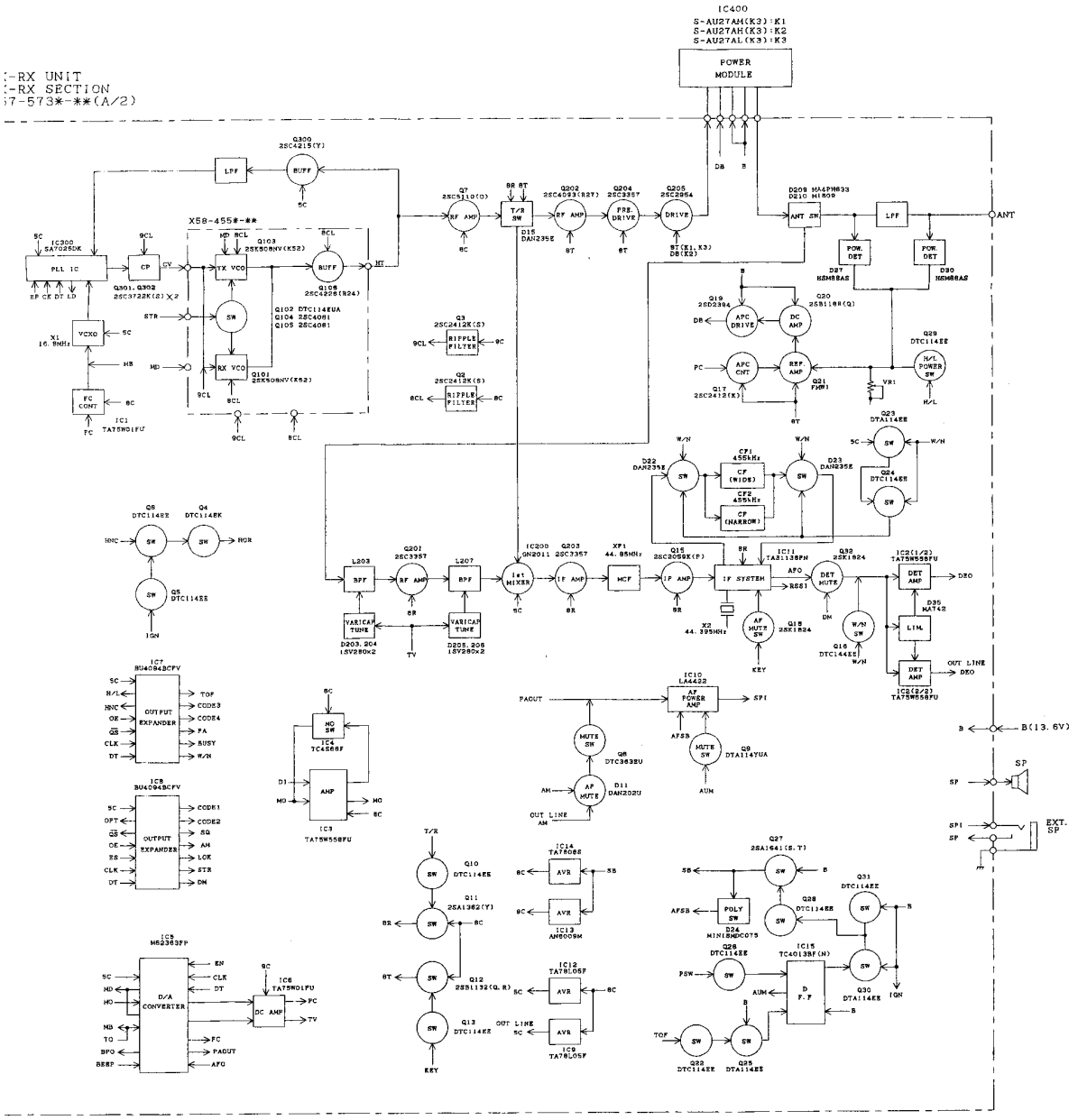

DESIGNED	DRAWN	CHECKED	APPROVED	PARTS NAME
				BLOCK DIAGRAM
				PARTS NUMBER
				TK-880 K1/K2/K3