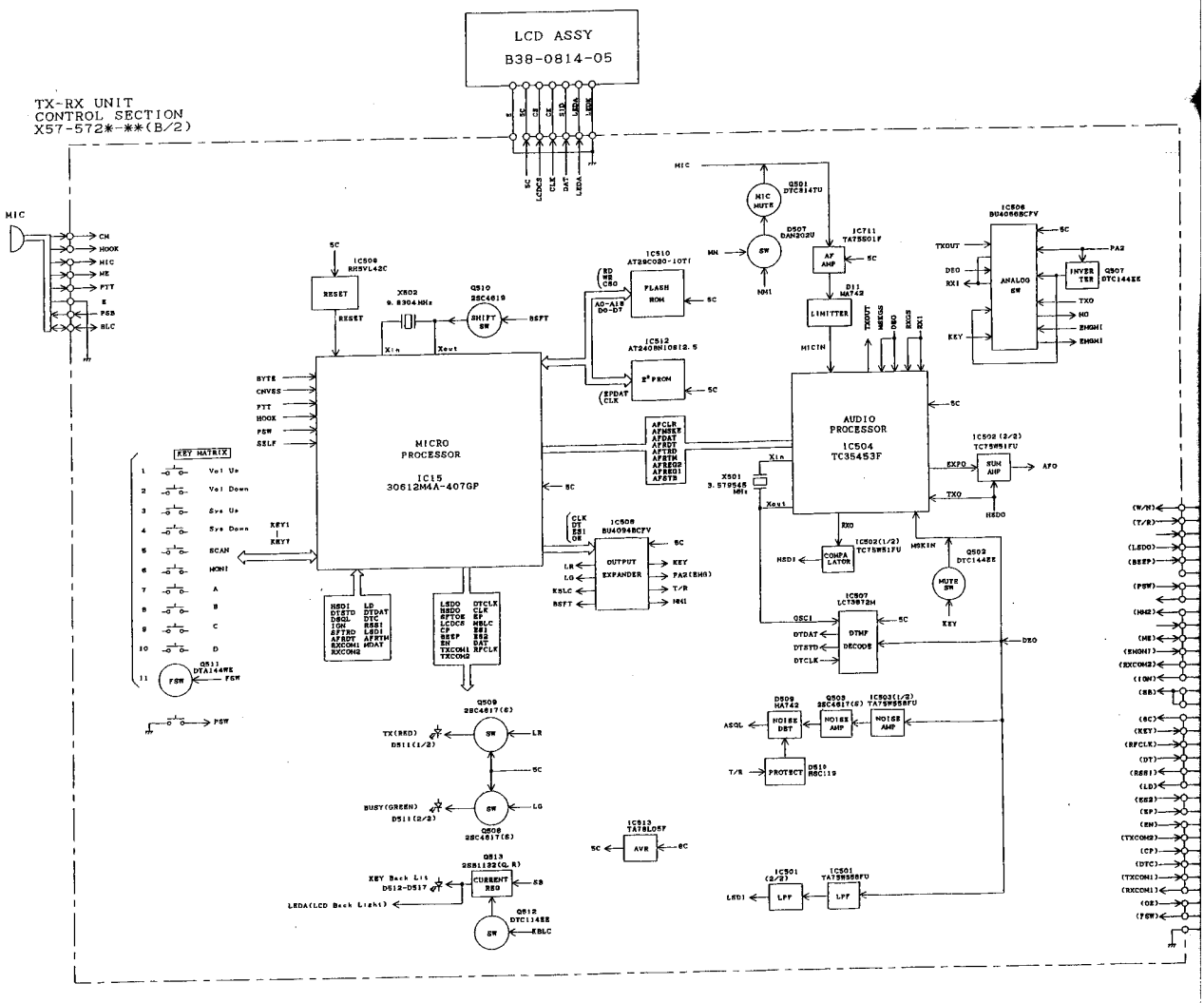
LCD ASSY
B38-0814-05
TX-RX UNIT
CONTROL SECTION
X57-572*-**(B/2)
MIC
CH
HOOK
MIC
ME
PTT
E
PSB
BLC
MICRO PROCESSOR
IC15
30612M4A-407GP
AUDIO PROCESSOR
TC35453F
FLASH ROM
IC510
AT29C020-10TI
IC512
AT24BM10B12.5
IC509
RH5VL42C
RESET
X502
9.8304MHz
Q510
2SC4619
SHIFT SW
IC508
BU4094BCFV
OUTPUT EXPANDER
IC506
BU4066BCFV
ANALOG SW
Q501
DTC114TU
MIC MUTE
D507
DAN202U
SW
IC711
TA75S01F
AF AMP
D11
HA742
LIMITTER
Q507
DTC144EE
INVERTER
IC502 (2/3)
TC75W51FU
SUM AMP
IC502(1/2)
TC75W51FU
COMPA LATOR
Q502
DTC144EE
MUTE SW
IC507
LC73972M
DTMF DECODER
X501
3.579545 MHz
KEY MATRIX
Vol Up
Vol Down
Sys Up
Sys Down
SCAN
MONI
A
B
C
D
Q511
DTA144WE
FSW
Q509
2SC4617(S)
TX(RED)
D511(1/2)
BUSY(GREEN)
D511(2/2)
Q508
2SC4617(S)
Q513
2SB1122(G,R)
CURRENT REG
KEY Back Lit
D512-D517
LEDA(LCD Back Light)
Q512
DTC114EE
IC513
TA78L05F
AVR
D509
HA742
NOISE DET
Q503
2SC4617(S)
NOISE AMP
IC503(1/2)
TA79W58FU
NOISE AMP
D510
RGC119
PROTECT
IC501 (2/3)
LPF
IC501
TA79W58FU
LPF

USE FOR	SYMBOL	REVISION NO	CODE	ISSUED	DATE
Y51-4559-**	A X				19 - -
	A X				19 - -
	A X				19 - -
	A X				19 - -
	A X				19 - -
	A X				19 - -
	A X				19 - -
	A X				19 - -
	A X				19 - -
	A X				19 - -

UNIT
SECTION
72*-**(A/2)

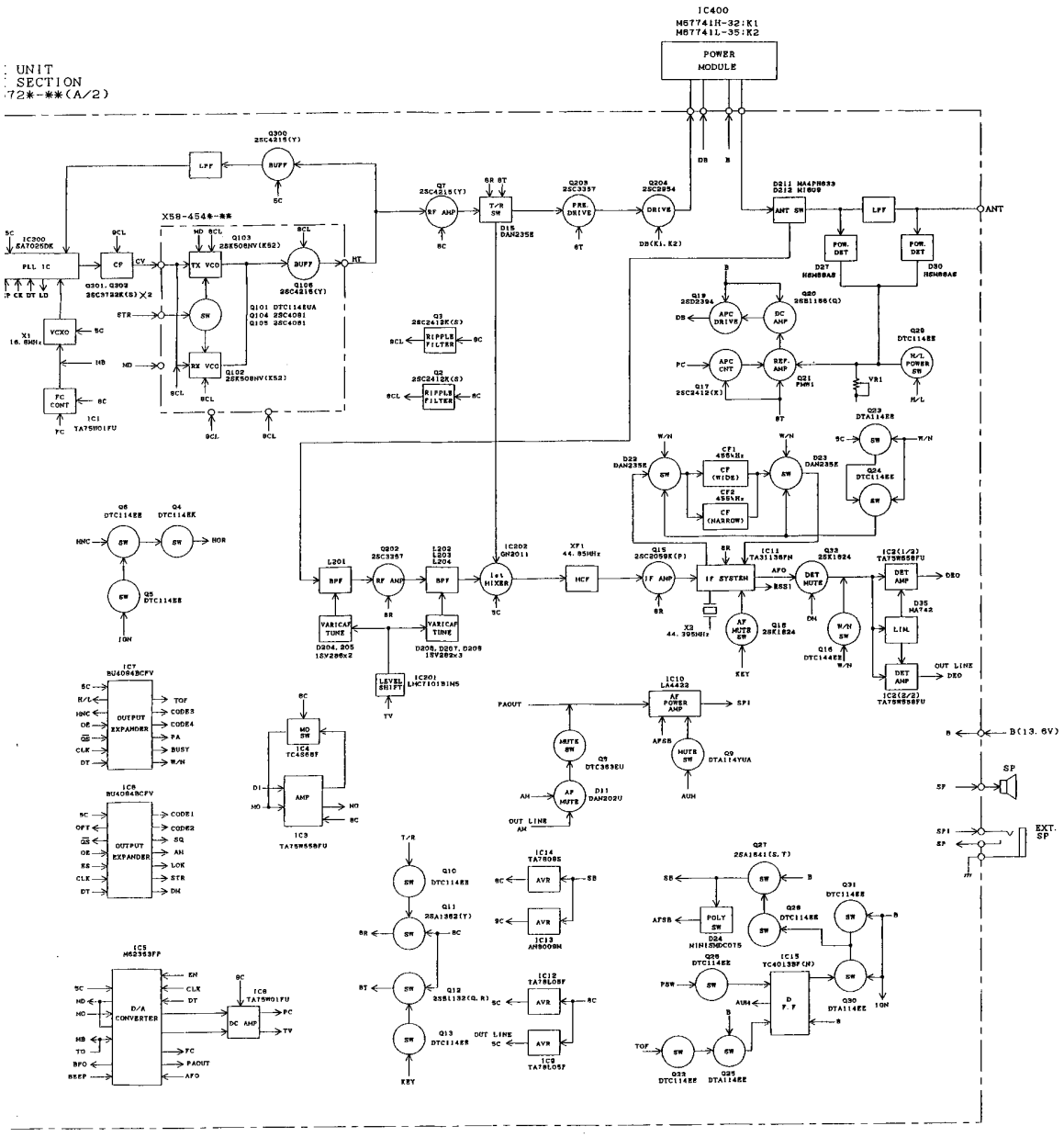

DESIGNED	DRAWN	CHECKED	APPROVED	PARTS NAME
				BLOCK DIAGRAM
				PARTS NUMBER
				TK-780 K1/K2