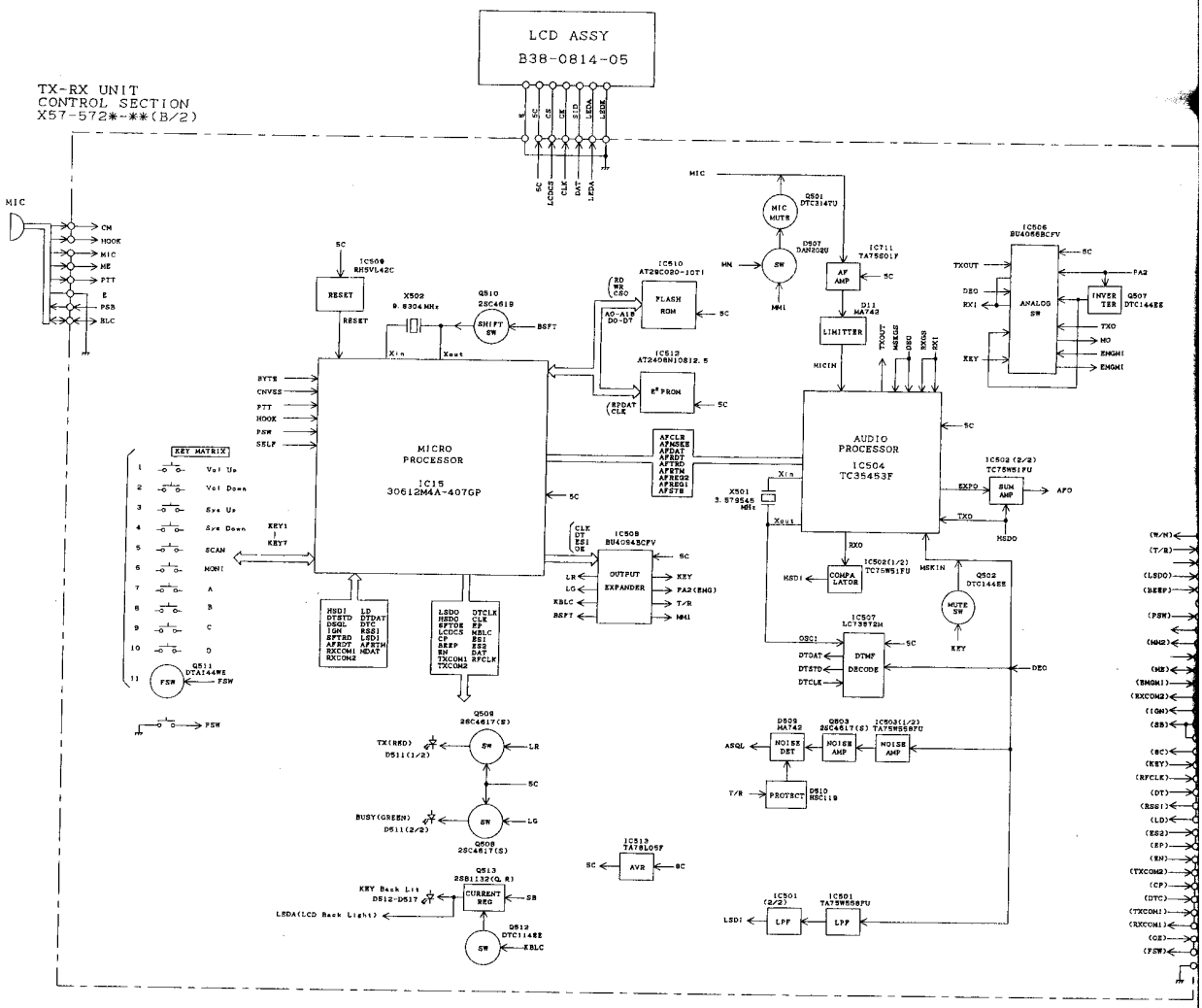
LCD ASSY
B38-0814-05
TX-RX UNIT
CONTROL SECTION
X57-572*-**(B/2)
MICRO PROCESSOR
IC15
30612M4A-407GP
AUDIO PROCESSOR
IC504
TC35453F
FLASH ROM
EEPROM
OUTPUT EXPANDER
DTMF DECODE
ANALOG SW
SUM AMP
COMPA-LATOR
NOISE AMP
NOISE DET
PROTECT
LPF
AVR
CURRENT REG
MUTE SW
SHIFT SW
RESET
LIMITTER
AF AMP
MIC MUTE
KEY MATRIX
Vol Up
Vol Down
Sys Up
Sys Down
SCAN
MONI
A
B
C
D
FSW
MIC
CM
HOOK
ME
PTT
PSB
BLC
SC
LCDCS
CLK
DAT
LEDA
LEDK
BYTE
CNVSS
RESET
PSW
SELF
KEY1
KEY7
X501
3.579545 MHz
X502
9.8304MHz
Xin
Xout
TX(RED)
BUSY(GREEN)
KEY Back Lit
LEDA(LCD Back Light)
EXPO
TXO
RXO
MSDO
MSKIN
MSDI
DEC
ASQL
T/R
LSDI
AFO
(W/M)
(T/B)
(LSDO)
(BEEP)
(PSW)
(MH2)
(ME)
(BMGM1)
(RXCOM2)
(IGN)
(SB)
(SC)
(KEY)
(RFCLK)
(DT)
(RSS1)
(LD)
(ES2)
(EP)
(EN)
(TXCOM2)
(CP)
(DTC)
(TXCOM1)
(RXCOM1)
(CE)
(FSW)

USE FOR	SYMBOL	REVISION NO	CODE	ISSUED	DATE
Y51-455*-**	⚠X				19 - -
	⚠X				19 - -
	⚠X				19 - -
	⚠X				19 - -
	⚠X				19 - -
	⚠X				19 - -
	⚠X				19 - -
	⚠X				19 - -
	⚠X				19 - -

'X-RX UNIT
'X-RX SECTION
:57-572*-**(A/2)

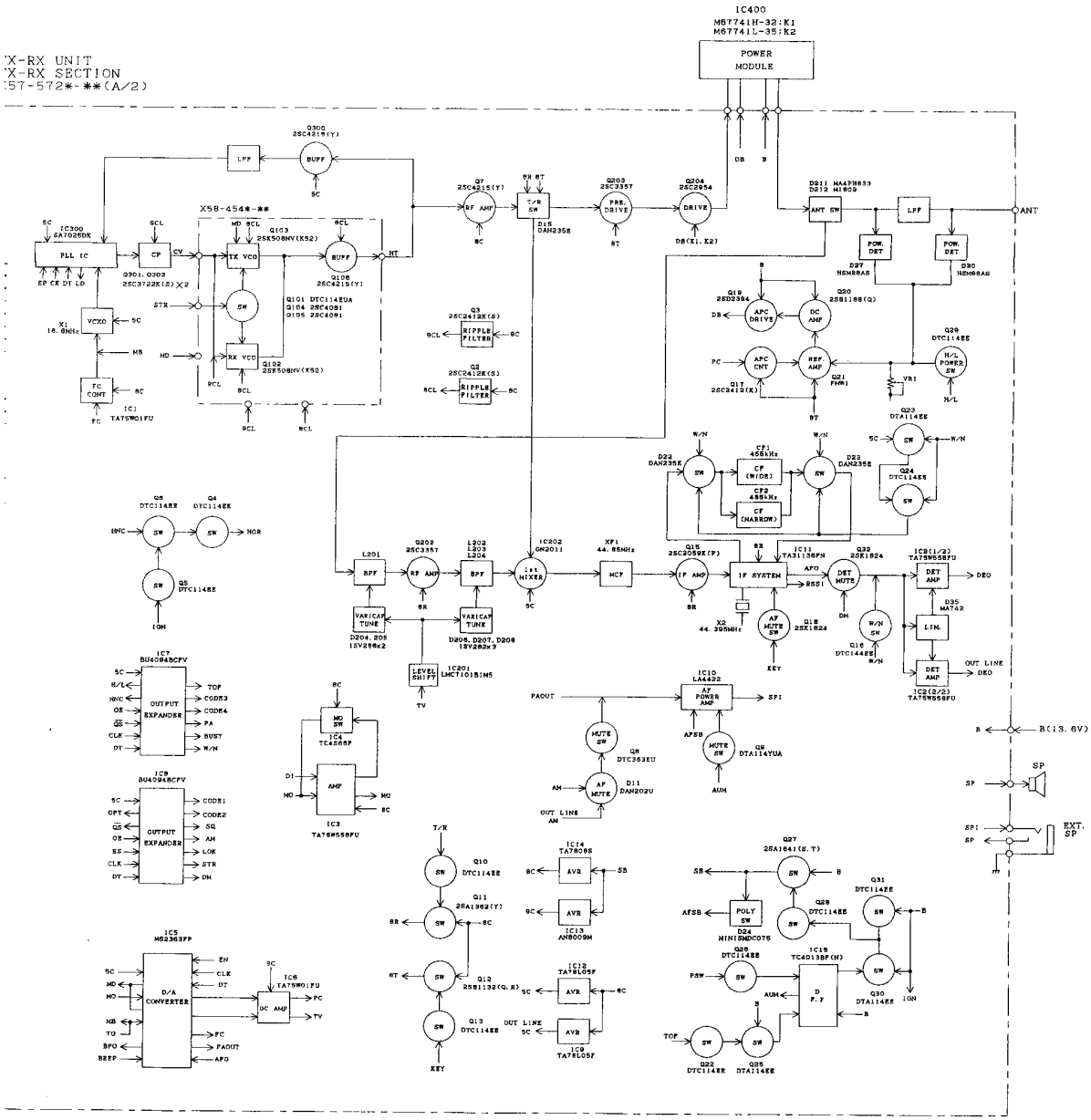

DESIGNED	DRAWN	CHECKED	APPROVED	PARTS NAME
				BLOCK DIAGRAM
				PARTS NUMBER
				TK-780 K1/K2