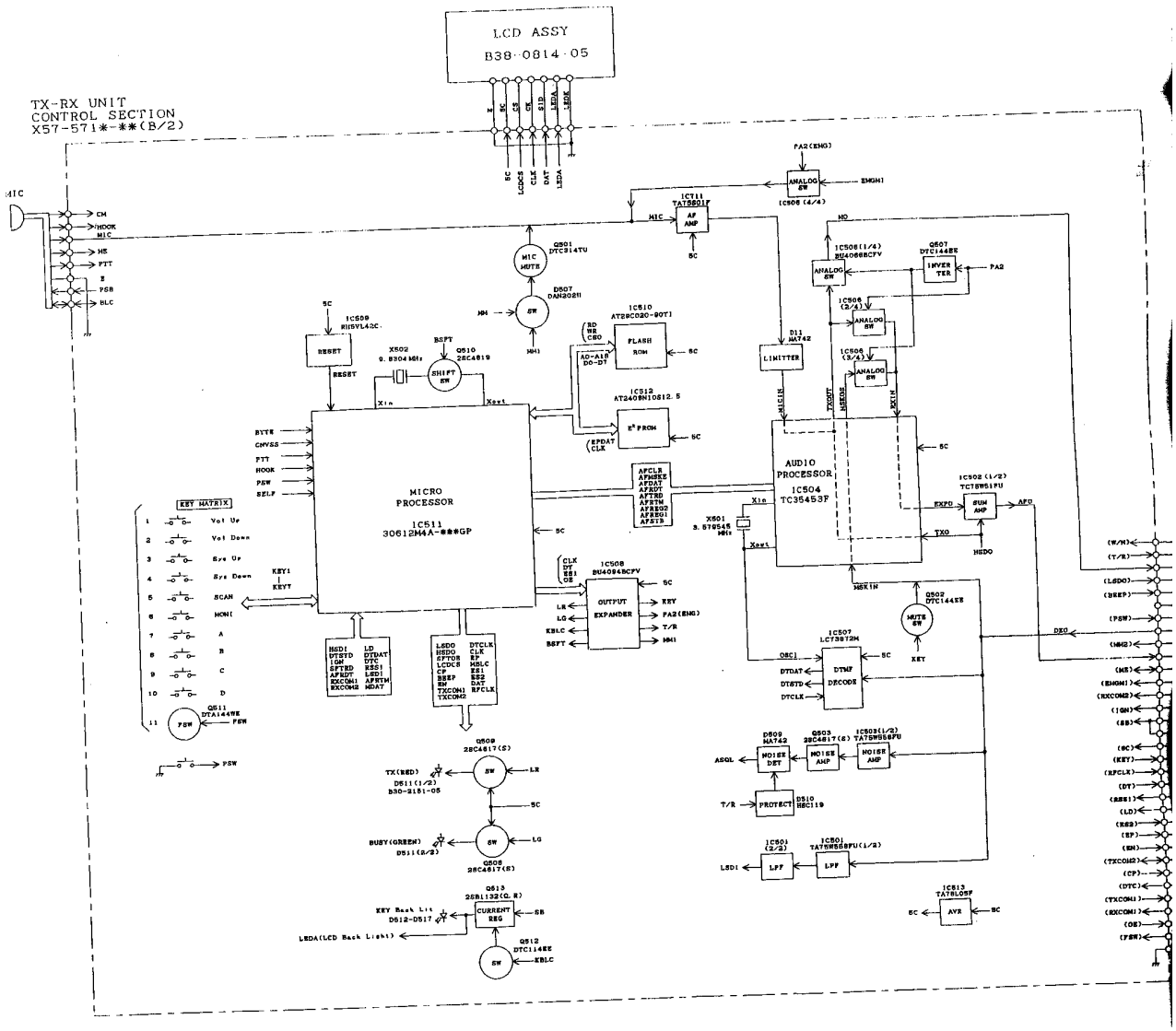
LCD ASSY
B38-0814-05
TX-RX UNIT
CONTROL SECTION
X57-571*-**(B/2)
MICRO PROCESSOR
1C511
30612M4A-***GP
AUDIO PROCESSOR
1C504
TC35453F
OUTPUT EXPANDER
1C508
BU4094BCFV
DTMF DECODE
1C507
LC7372M
FLASH ROM
1C510
AT28C020-90TI
E² PROM
1C512
AT24C08N10B12.5
RESET
1C509
RH5VL42C
SHIFT SW
Q510
2SC4819
X502
9.8304 MHz
X501
3.579545 MHz
LIMITER
D11
MA742
AF AMP
1C511
TA7360IT
ANALOG SW
1C508(1/4)
BU4066BCFV
INVERTER
Q507
DTC144EE
1C506
(2/4)
1C506
(3/4)
SUM AMP
1C502 (1/2)
TC75W51FU
MUTE SW
Q502
DTC144EE
NOISE DET
D509
MA742
NOISE AMP
1C503(1/2)
TA75W558FU
PROTECT
D510
HSC119
LPF
1C501
TA75W558FU(1/2)
1C501
(2/2)
CURRENT REG
Q513
2SB1132(Q,R)
SW
Q512
DTC114EE
AVR
1C513
TA78L05F
Q509
2SC4617(S)
Q508
2SC4617(S)
D511(1/2)
D511(2/2)
D512-D517
Q511
DTA144WE
PSW
KEY MATRIX
Vol Up
Vol Down
Sys Up
Sys Down
SCAN
MONI
A
B
C
D
MIC MUTE
Q501
DTC114TU
D507
DAN202U
MIC
CM
HOOK
HS
PTT
PSB
BLC
LCD ASSY
SC
LCDCS
CLK
DAT
LEDA
LEDK
PA2(ENG)
EMGNI
(1C508 (4/4)
HO
PA2
MIC
SC
BYTE
CNVSS
PTT
HOOK
PSW
SELF
KEY1
KEYT
RESET
Xin
Xout
EPDAT
CLK
AFCLK
APHSEX
AFDAT
AFRDT
AFTRD
AFTRM
AFRES2
AFRES1
AFSTB
CLK
DT
ES1
OE
LR
LG
KBLC
BSFT
KEY
T/R
PA2(ENG)
MONI
TX(RED)
BUSY(GREEN)
KEY Back Lit
LEDA(LCD Back Light)
ASOL
LSDI
EXPO
TXO
HSDO
DEO
OSC1
DTDAT
DTSTD
DTCLK
(W/H)
(T/R)
(LSDO)
(BEEP)
(PSW)
(MHZ2)
(HS)
(EMGNI)
(RXCOM2)
(IGN)
(SB)
(SC)
(KEY)
(RFCLK)
(DT)
(ES1)
(LD)
(RES)
(EP)
(EN)
(TXCOM2)
(CP)
(DTC)
(TXCOM1)
(RXCOM1)
(OE)
(FSW)

USE FOR	SYMBOL	REVISION NO	CODE	ISSUED	DATE
	X				19 - -
	X				19 - -
	X				19 - -
	X				19 - -
	X				19 - -
	X				19 - -
	X				19 - -
	X				19 - -
	X				19 - -

-RX UNIT
-RX SECTION
7-571*-**(A/2)

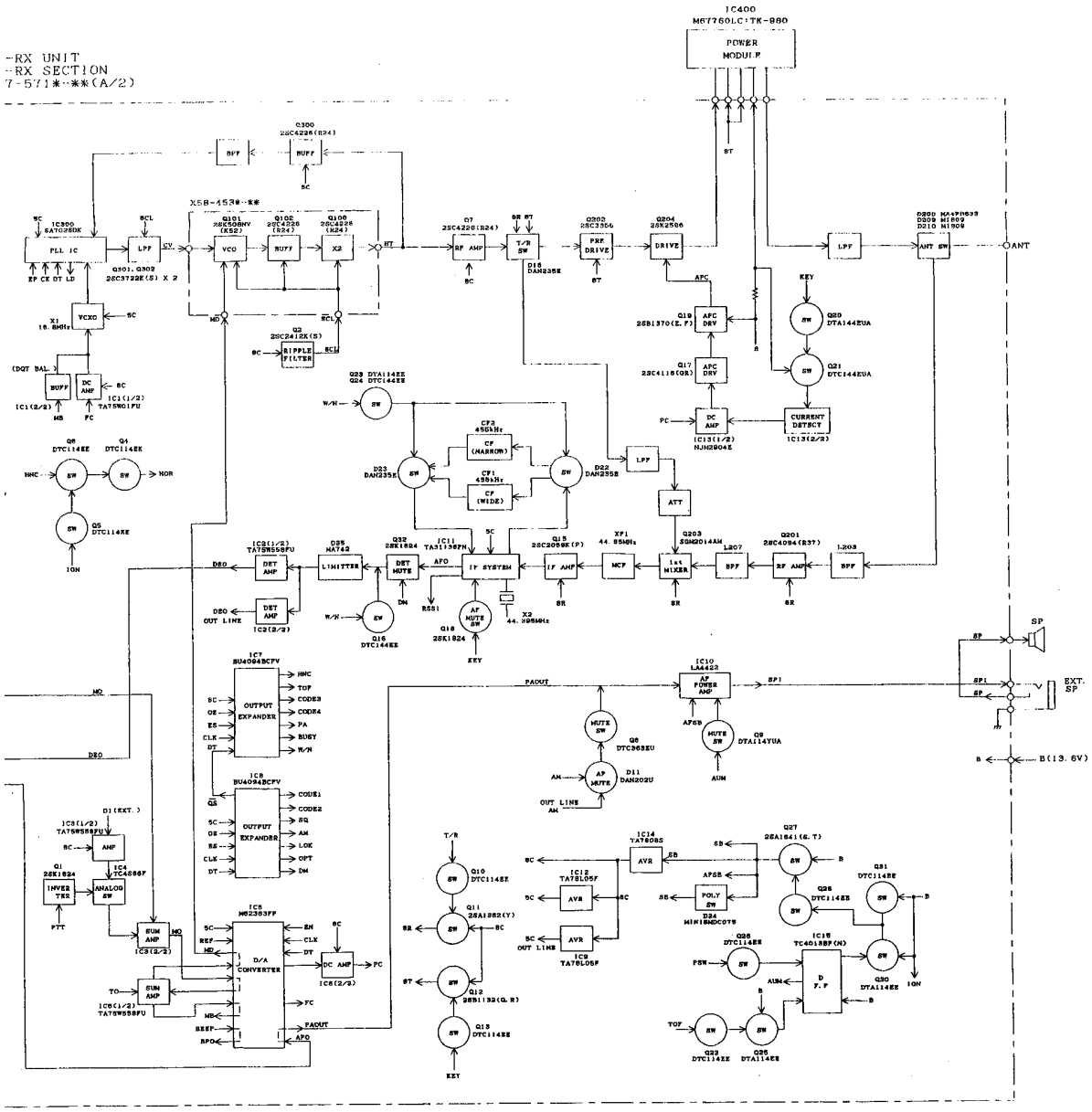

FCC ID: ALH24563110
BLOCK DIAGRAM

TK-980

DESIGNED	DRAWN	CHECKED	APPROVED	PARTS NAME
				BLOCK DIAGRAM
				PARTS NUMBER
				TK-980