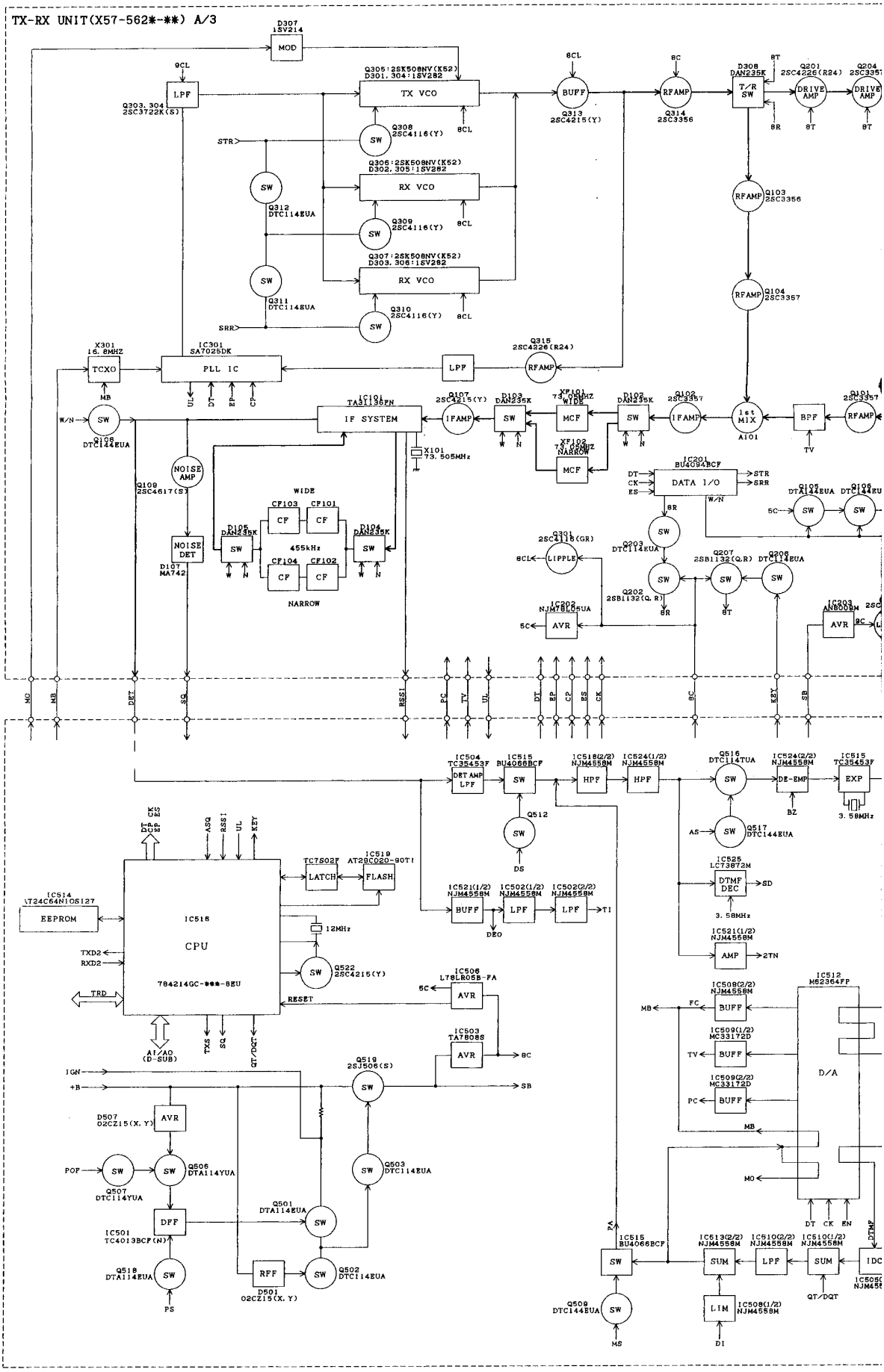
TX-RX UNIT(X57-562*-**) A/3
D307 1SV214
MOD
LPF
Q303, 304 2SC3722K(S)
Q305:2SK508NV(K52) D301, 304:1SV282
TX VCO
Q308 2SC4116(Y)
Q306:2SK508NV(K52) D302, 305:1SV282
RX VCO
Q309 2SC4116(Y)
Q307:2SK508NV(K52) D303, 306:1SV282
RX VCO
Q310 2SC4116(Y)
Q312 DTC114EUA
Q311 DTC114EUA
STR
SRR
SW
BUFF
Q313 2SC4215(Y)
RFAMP
Q314 2SC3356
D308 DAN235K
T/R SW
Q201 2SC4226(R24)
DRIVE AMP
Q204 2SC3357
Q103 2SC3356
Q104 2SC3357
X301 16.8MHZ
TCXO
IC301 SA7025DK
PLL IC
Q315 2SC4226(R24)
Q108 DTC144EUA
IC101 TA31136FN
IF SYSTEM
Q107 2SC4215(Y)
IFAMP
D103 DAN235K
XF101 73.05MHZ WIDE
MCF
D102 DAN235K
Q106 2SC3357
1st MIX
AI01
BPF
Q101 2SC3357
X101 73.505MHz
XF102 73.05MHz NARROW
Q109 2SC4617(S)
NOISE AMP
NOISE DET
D107 MA742
WIDE
CF103
CF101
CF
D105 DAN235K
D104 DAN235K
455kHz
CF104
CF102
NARROW
IC201 BU4094BCF
DATA I/O
Q105 DTC144EUA
Q106 DTC144EU
Q301 2SC4116(GR)
LIPPLE
Q203 DTC114EUA
Q207 2SB1132(Q,R)
Q205 DTC114EUA
Q202 2SB1132(Q,R)
IC202 NJM78L05UA
AVR
IC203 AN8000M
MO
MB
DET
SQ
RSSI
FC
TV
UL
DT
RP
CP
RS
CK
BC
KEY
SB
IC504 TC35453F
DET AMP LPF
IC515 BU4066BCF
IC518(2/2) NJM4558M
HPF
IC524(1/2) NJM4558M
Q516 DTC114TUA
IC524(2/2) NJM4558M
DE-EMP
IC515 TC35453F
EXP
3.58MHz
Q512
DS
Q517 DTC144EUA
AS
BZ
IC525 LC73872M
DTMF DEC
SD
IC519 AT29C020-90TI
TC7S02F
LATCH
FLASH
IC514 AT24C64N10SI27
EEPROM
IC516
CPU
784214GC-***-8EU
12MHz
Q522 2SC4215(Y)
RESET
TXD2
RXD2
TRD
AI/AO (D-SUB)
TXS
QT/DQT
IC521(1/2) NJM4558M
IC502(1/2) NJM4558M
IC502(2/2) NJM4558M
BUFF
LPF
DEO
T1
IC521(1/2) NJM4558M
AMP
2TN
IC506 L78LR05B-FA
IC503 TA78008S
Q519 2SJ506(S)
IGN
+B
SB
D507 02CZ15(X,Y)
POF
Q506 DTA114YUA
Q507 DTC114YUA
Q503 DTC114EUA
IC501 TC4013BCF(N)
DFF
Q501 DTA114EUA
Q518 DTA114EUA
PS
RFF
D501 02CZ15(X,Y)
Q502 DTC114EUA
IC508(2/2) NJM4558M
IC509(1/2) MC33172D
IC509(2/2) MC33172D
IC512 M62364FP
D/A
IC515 BU4066BCF
IC513(2/2) NJM4558M
IC510(2/2) NJM4558M
IC510(1/2) NJM4558M
SUM
LIM
IC508(1/2) NJM4558M
Q509 DTC144EUA
MS
DI
QT/DQT
DTMF

USE FOR	SYMBOL	REVISION NO	CODE	ISSUED	DATE
	⚠ X				19 - -
	⚠ X				19 - -
	⚠ X				19 - -
	⚠ X				19 - -
	⚠ X				19 - -
	⚠ X				19 - -
	⚠ X				19 - -
	⚠ X				19 - -
	⚠ X				19 - -

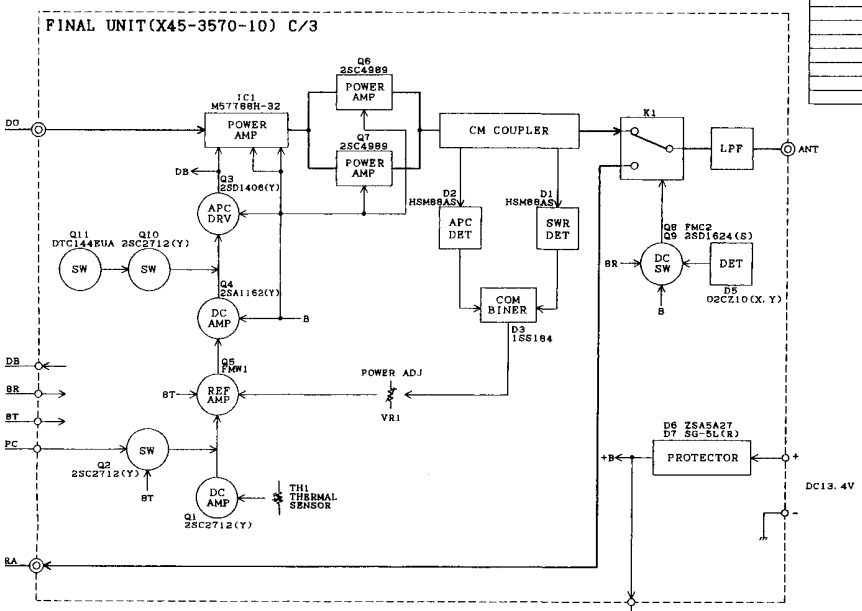

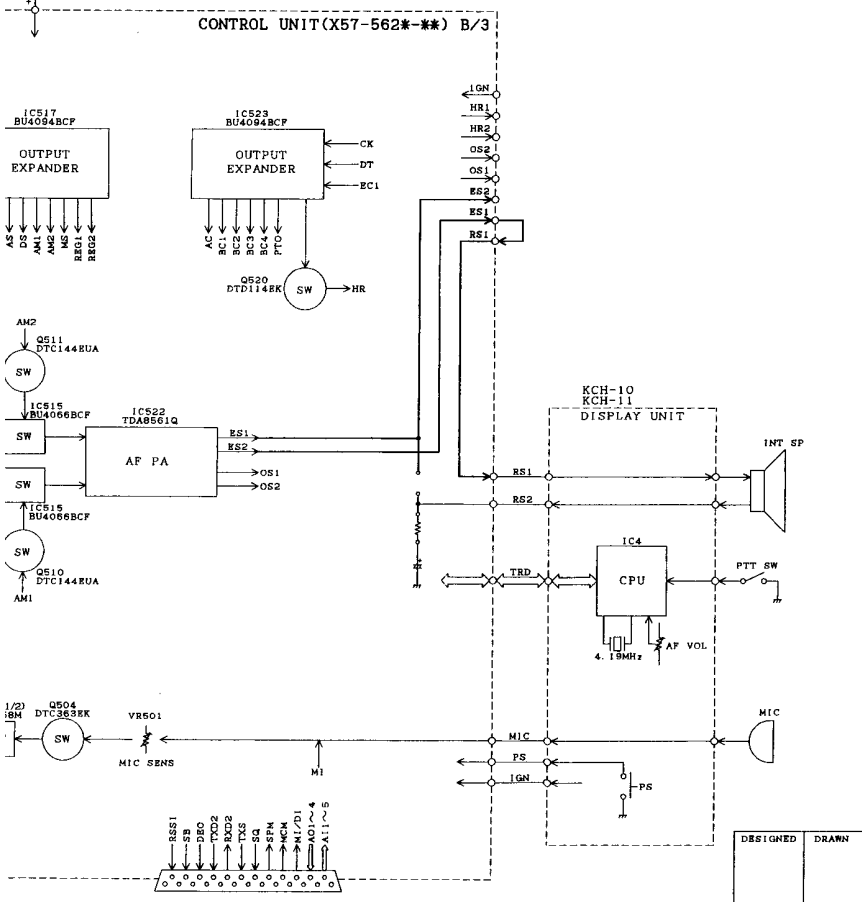

DESIGNED	DRAWN	CHECKED	APPROVED	PARTS NAME
				BLOCK DIAGRAM
				PARTS NUMBER
				TK-890H

株式会社ケンウッド KENWOOD CORPORATION