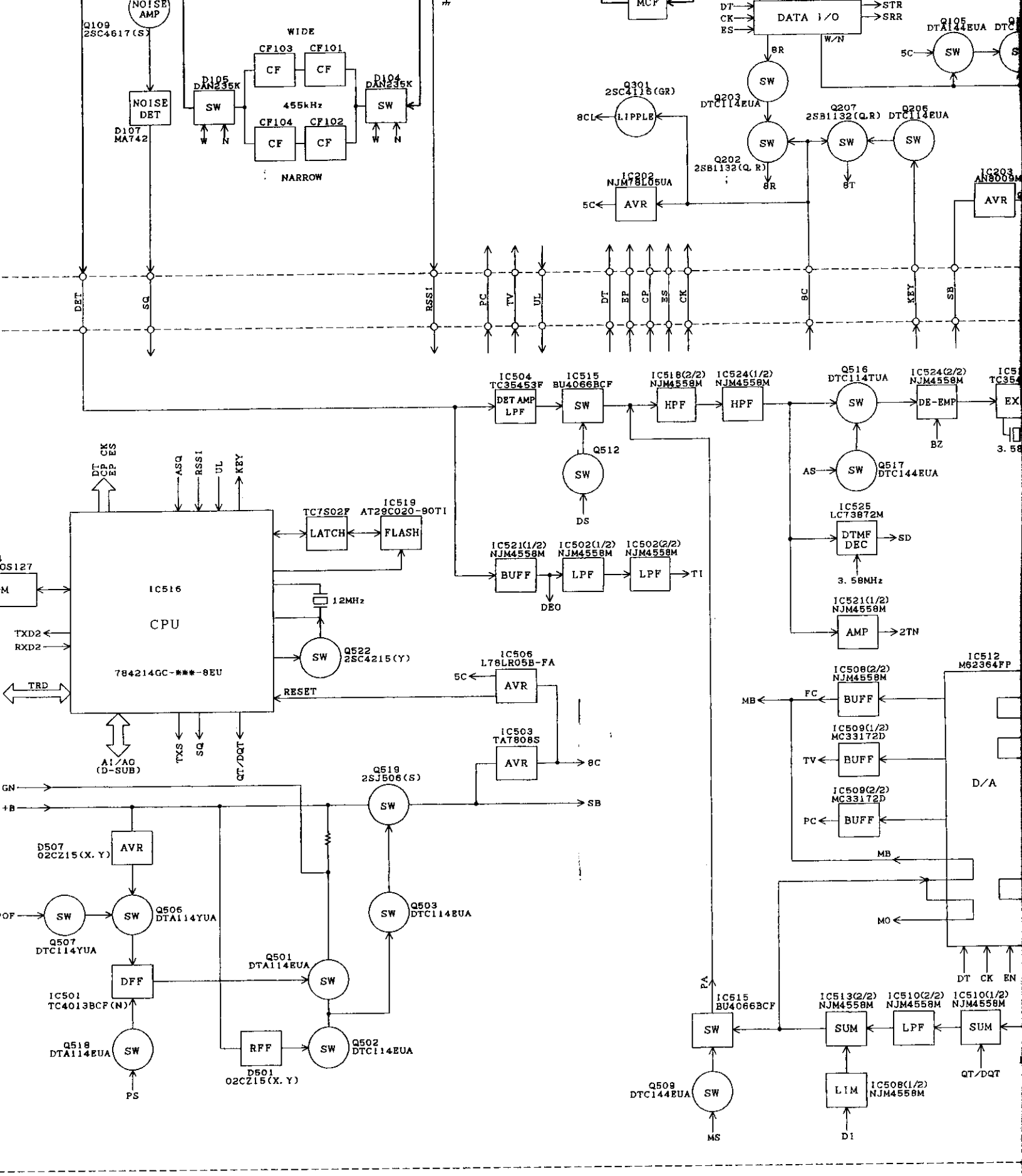
NOISE AMP
Q109 2SC4617(S)
NOISE DET
D107 MA742
WIDE
CF103
CF101
CF
CF
D105 DAN235K
SW
455kHz
D104 DAN235K
SW
CF104
CF102
CF
CF
NARROW
MCP
DATA I/O
DT
CK
ES
STR
SRR
W/N
8R
SW
Q203 DTC114EUA
Q301 2SC4116(GR)
LIPPLE
8CL
Q202 2SB1132(Q,R)
8R
Q207 2SB1132(Q,R)
SW
8T
Q206 DTC114EUA
SW
IC202 NJM78L05UA
AVR
5C
IC203 AN8009M
AVR
Q105 DTA144EUA
5C
SW
DET
SQ
RSSI
PC
TV
UL
DT
EP
CP
ES
CK
8C
KEY
SB
IC504 TC35453F
DET AMP LPF
IC515 BU4066BCF
SW
Q512
SW
DS
IC518(2/2) NJM4558M
HPF
IC524(1/2) NJM4558M
HPF
Q516 DTC114TUA
SW
IC524(2/2) NJM4558M
DE-EMP
BZ
AS
SW
Q517 DTC144EUA
IC525 LC73872M
DTMF DEC
SD
3.58MHz
IC521(1/2) NJM4558M
AMP
2TN
IC521(1/2) NJM4558M
BUFF
IC502(1/2) NJM4558M
LPF
IC502(2/2) NJM4558M
LPF
TI
DEO
DT
CP
EP
ASQ
RSSI
UL
KEY
CK
ES
TC7S02F
LATCH
IC519 AT29C020-90TI
FLASH
IC516
CPU
784214GC-***-8EU
12MHz
TXD2
RXD2
TRD
SW
Q522 2SC4215(Y)
RESET
IC506 L78LR05B-FA
AVR
5C
IC503 TA7808S
AVR
8C
AI/AO (D-SUB)
TXS
SQ
QT/DQT
Q519 2SJ506(S)
SW
SB
GN
+B
D507 02CZ15(X,Y)
AVR
SW
Q506 DTA114YUA
Q507 DTC114YUA
SW
Q503 DTC114EUA
DFF
IC501 TC4013BCF(N)
Q501 DTA114EUA
SW
Q518 DTA114EUA
SW
PS
RFF
D501 02CZ15(X,Y)
SW
Q502 DTC114EUA
IC508(2/2) NJM4558M
BUFF
FC
MB
IC509(1/2) MC3317T2D
BUFF
TV
IC509(2/2) MC3317T2D
BUFF
PC
IC512 M62364FP
D/A
MB
MO
DT
CK
EN
PA
IC515 BU4066BCF
SW
Q509 DTC144EUA
SW
MS
IC513(2/2) NJM4558M
SUM
IC510(2/2) NJM4558M
LPF
IC510(1/2) NJM4558M
SUM
QT/DQT
LIM
IC508(1/2) NJM4558M
DI

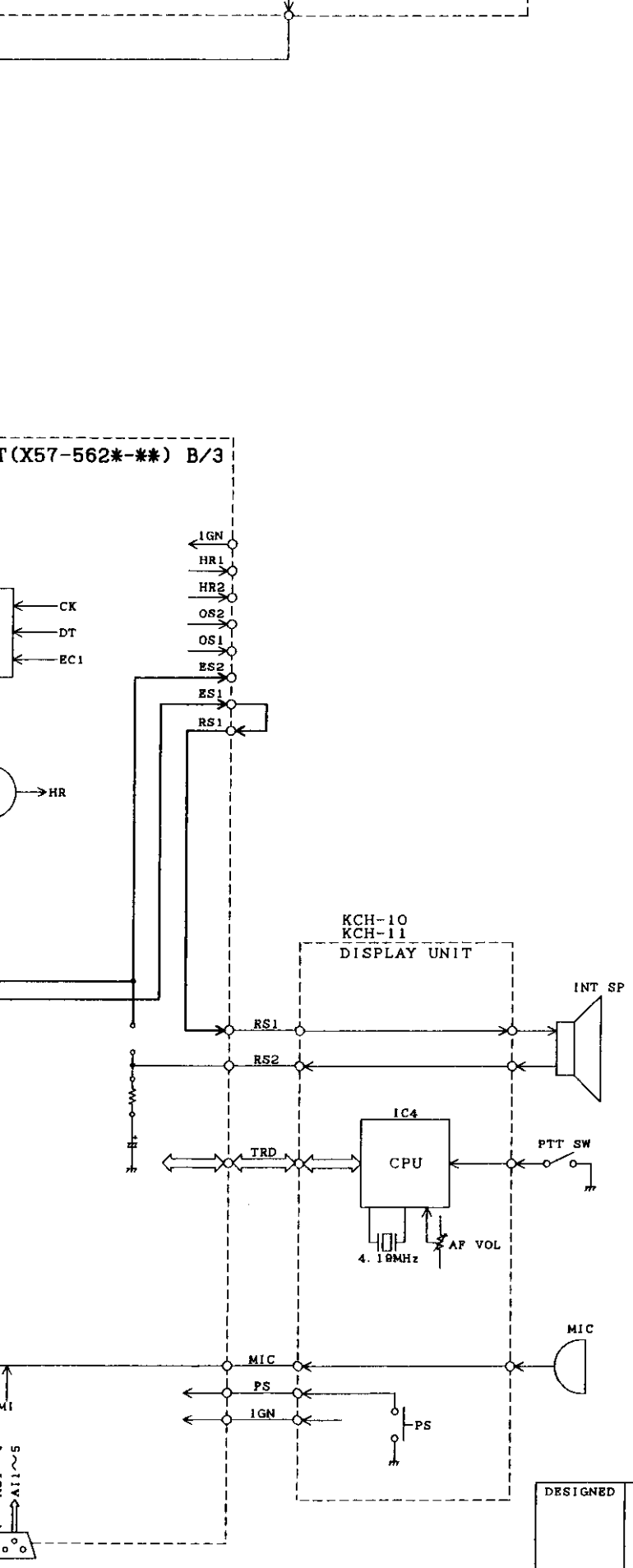

DESIGNED	DRAWN	CHECKED	APPROVED	PARTS NAME
				BLOCK DIAGRAM
				PARTS NUMBER
株式会社ケンウッド KENWOOD CORPORATION				TK-890