TX-RX UNIT(X57-561*-**) A/3

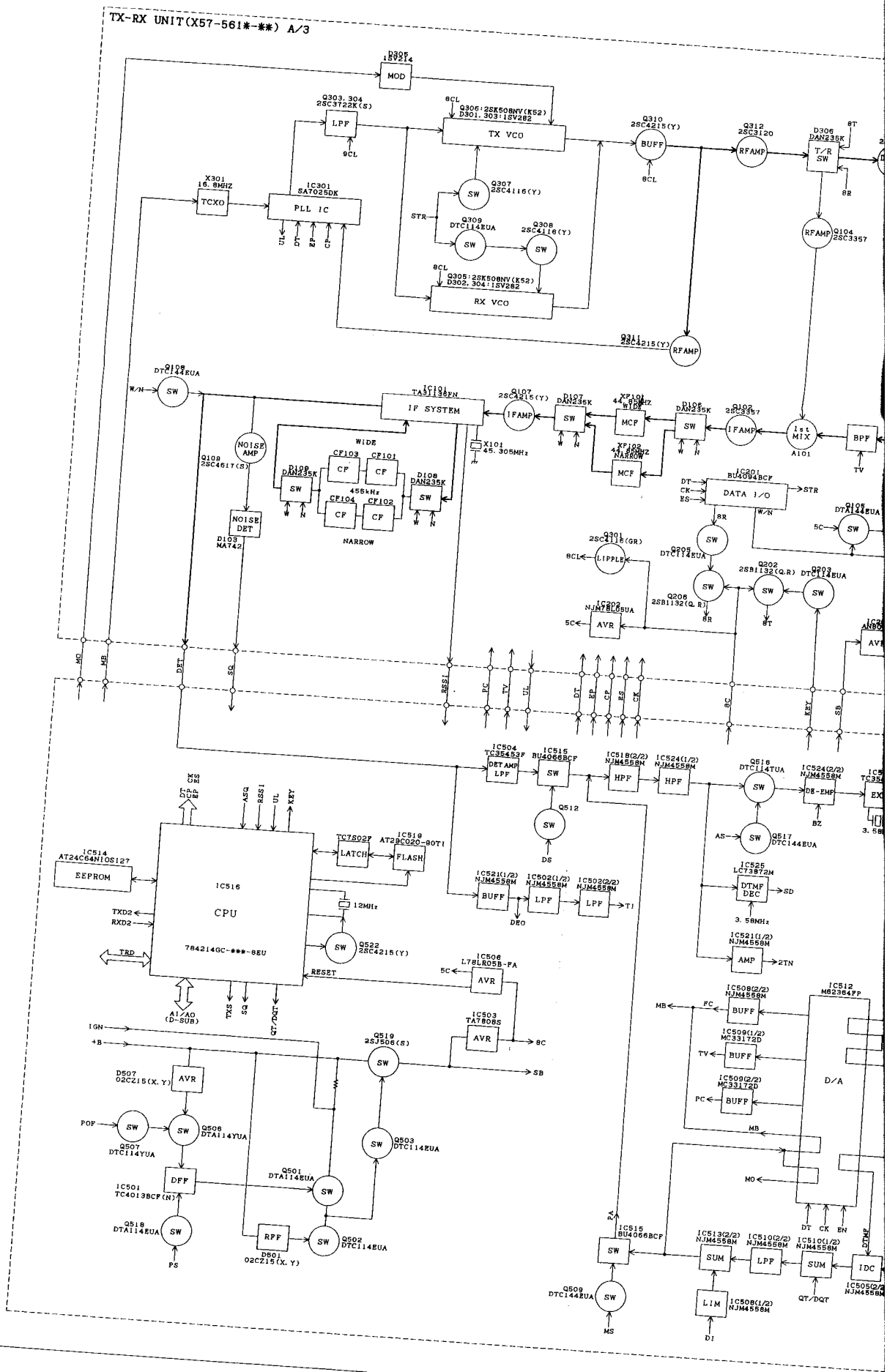

USE FOR	SYMBOL	REVISION NO	CODE	ISSUED	DATE
	⚠×				19 - -
	⚠×				19 - -
	⚠×				19 - -
	⚠×				19 - -
	⚠×				19 - -
	⚠×				19 - -
	⚠×				19 - -
	⚠×				19 - -
	⚠×				19 - -
	⚠×				19 - -

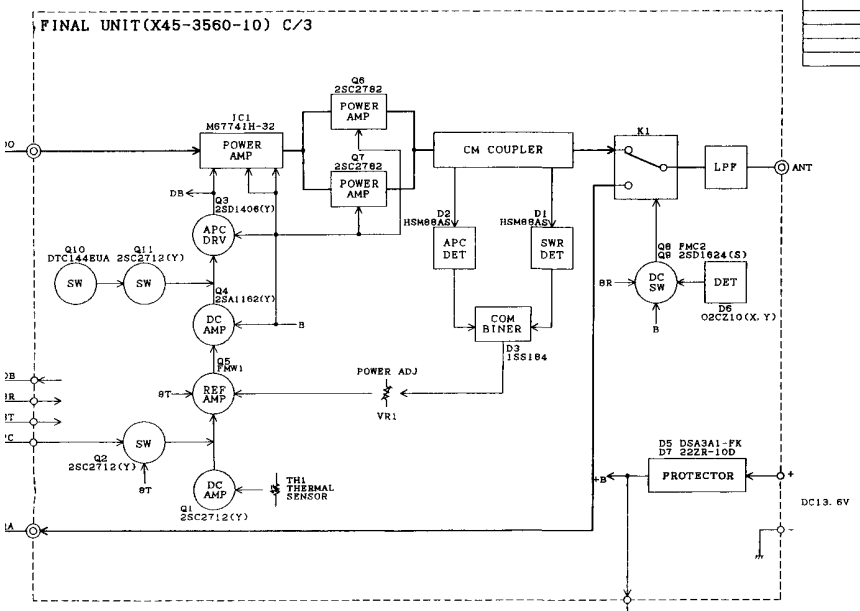

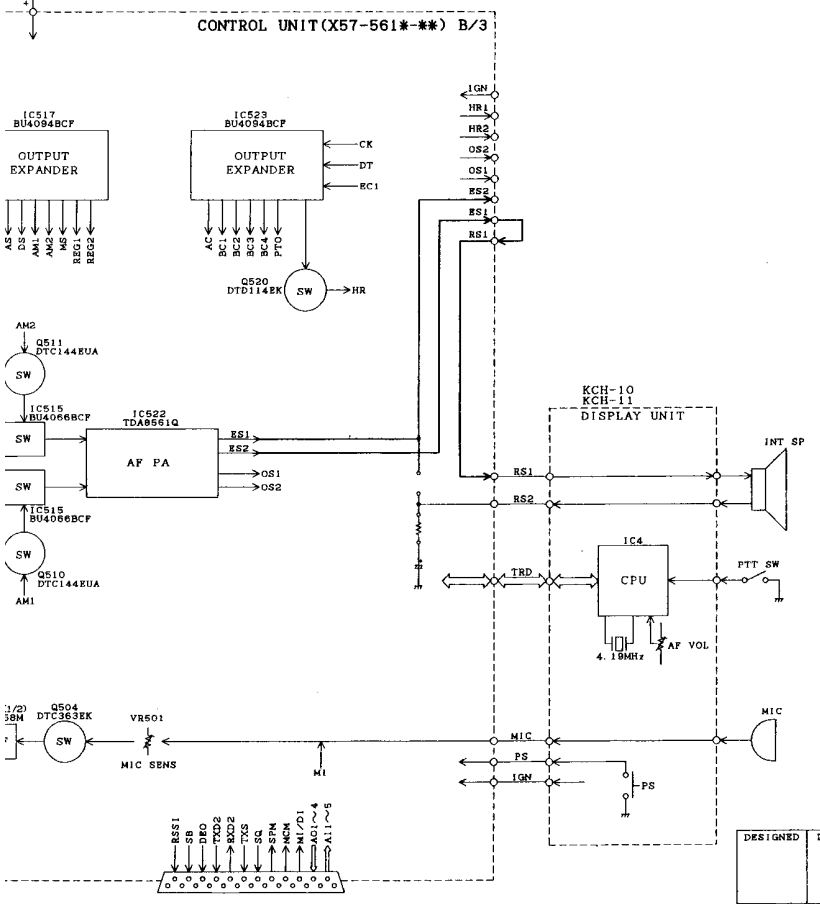

DESIGNED	DRAWN	CHECKED	APPROVED	PARTS NAME
				BLOCK DIAGRAM
				PARTS NUMBER TK-790H

株式会社ケンウッド KENWOOD CORPORATION